Dist	COUNTY	ROUTE	POST MILES TOTAL PROJECT	SHEET No.	TOTAL SHEETS
04	CC, Sol	680	25.0/25.4, 0.0/0.6	1	14

INDEX OF PLANS

SHEET No.	DESCRIPTION
1	TITLE SHEET AND LOCATION MAP
2	CONSTRUCTION DETAILS
3	UTILITY PLAN
4	CONSTRUCTION AREA SIGNS
5 - 7	REVISED STANDARD PLANS
STRUCTURE PLANS	
8 - 14	BENICIA-MARTINEZ BRIDGE FLOOR BEAM AND BEARING RETROFIT

THE STANDARD PLANS LIST APPLICABLE TO THIS CONTRACT IS INCLUDED IN THE NOTICE TO BIDDERS AND SPECIAL PROVISIONS BOOK.

STATE OF CALIFORNIA

DEPARTMENT OF TRANSPORTATION

PROJECT PLANS FOR CONSTRUCTION ON STATE HIGHWAY

IN CONTRA COSTA AND SOLANO COUNTIES AT THE BENICIA-MARTINEZ BRIDGE

TO BE SUPPLEMENTED BY STANDARD PLANS DATED 2010

LOCATION MAP

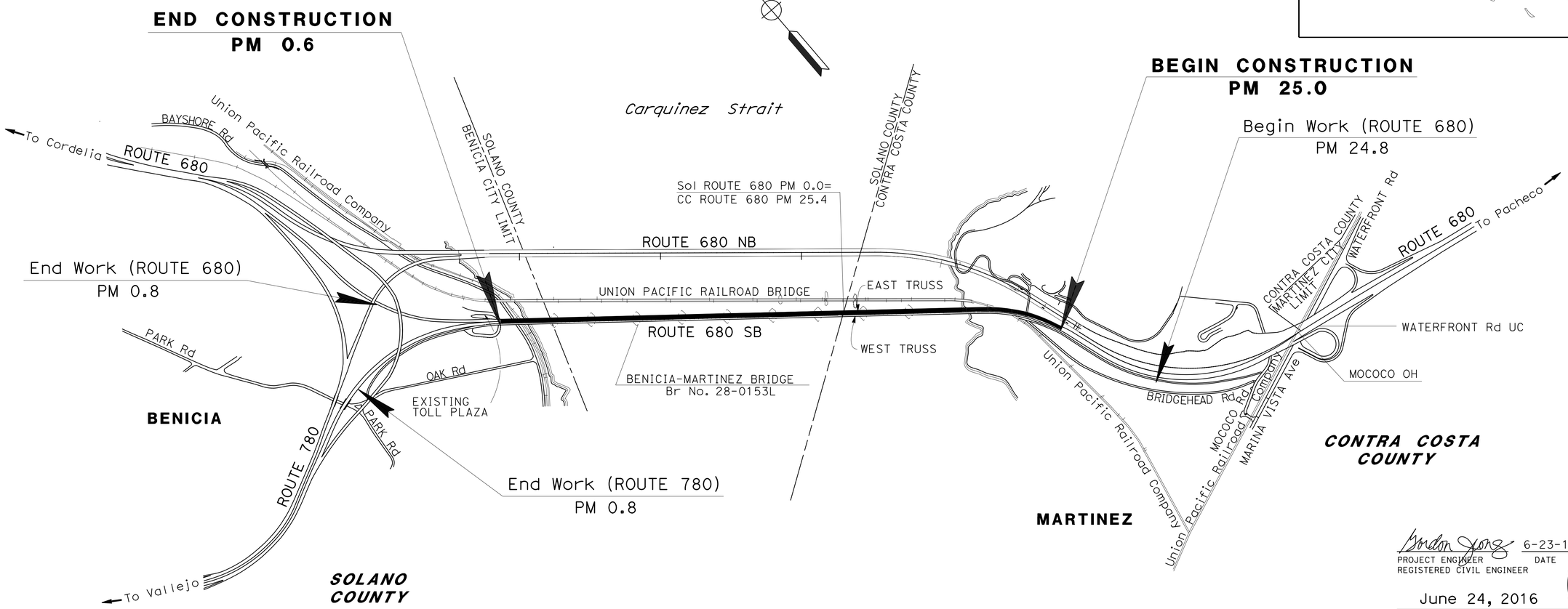

NO SCALE

THE CONTRACTOR SHALL POSSESS THE CLASS (OR CLASSES) OF LICENSE AS SPECIFIED IN THE "NOTICE TO BIDDERS."

PROJECT MANAGER: MOHSEN PAZOOKI

DESIGN MANAGER: LAWRENCE A. JONES

Gordon Jeong 6-23-16
PROJECT ENGINEER DATE
REGISTERED CIVIL ENGINEER

June 24, 2016
PLANS APPROVAL DATE

REGISTERED PROFESSIONAL ENGINEER — Gordon W. Jeong — No. 33151 — Exp. 6-30-16 — CIVIL — STATE OF CALIFORNIA

THE STATE OF CALIFORNIA OR ITS OFFICERS OR AGENTS SHALL NOT BE RESPONSIBLE FOR THE ACCURACY OR COMPLETENESS OF SCANNED COPIES OF THIS PLAN SHEET.

CONTRACT No.	04-3G4624
PROJECT ID	0412000062

LAST REVISION 06-20-16 — DATE PLOTTED => 27-JUN-2016 TIME PLOTTED => 08:10

Dist	COUNTY	ROUTE	POST MILES TOTAL PROJECT	SHEET No.	TOTAL SHEETS
04	CC, Sol	680	25.0/25.4, 0.0/0.6	2	14

REGISTERED CIVIL ENGINEER 6-23-16 DATE

6-24-16
PLANS APPROVAL DATE

REGISTERED PROFESSIONAL ENGINEER Gordon W. Jeong No. 33151 Exp. 6-30-16 CIVIL STATE OF CALIFORNIA

THE STATE OF CALIFORNIA OR ITS OFFICERS OR AGENTS SHALL NOT BE RESPONSIBLE FOR THE ACCURACY OR COMPLETENESS OF SCANNED COPIES OF THIS PLAN SHEET.

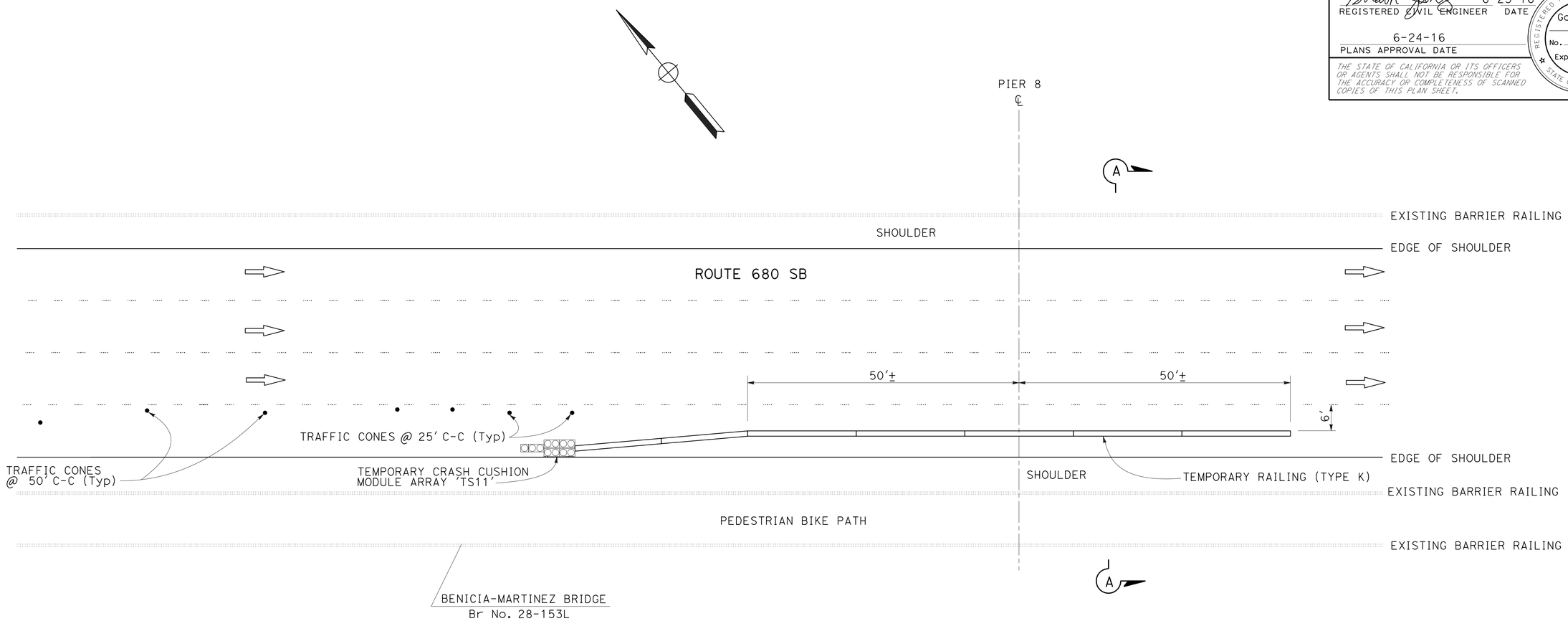

PLAN

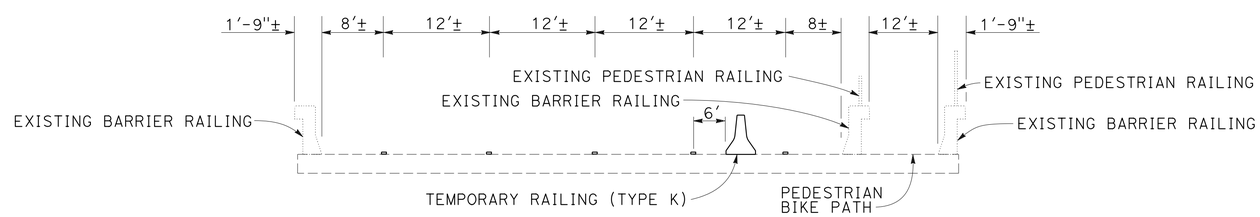

SECTION A-A

(TEMPORARY RAILING AT PIER 8)

ROADWAY QUANTITIES

DESCRIPTION	UNITS	QUANTITY
TEMPORARY RAILING (TYPE K)	LF	140
TEMPORARY CRASH CUSHION MODULE	EA	11

CONSTRUCTION DETAILS

NO SCALE

C-1

STATE OF CALIFORNIA - DEPARTMENT OF TRANSPORTATION
Caltrans
DESIGN

FUNCTIONAL SUPERVISOR: LAWRENCE A. JONES
CALCULATED-DESIGNED BY: FERNANDO CORDERO
CHECKED BY: DAVID WONG
REVISED BY: GJ
DATE REVISED: 6-22-16

LAST REVISION 05-18-16
DATE PLOTTED => 27-JUN-2016
TIME PLOTTED => 08:10

Dist	COUNTY	ROUTE	POST MILES TOTAL PROJECT	SHEET No.	TOTAL SHEETS
04	CC, Sol	680	25.0/25.4, 0.0/0.6	3	14

REGISTERED CIVIL ENGINEER 6-24-16 DATE

6-24-16
PLANS APPROVAL DATE

REGISTERED PROFESSIONAL ENGINEER Trinh T. Lai No. 63630 Exp. 9-30-16 CIVIL STATE OF CALIFORNIA

THE STATE OF CALIFORNIA OR ITS OFFICERS OR AGENTS SHALL NOT BE RESPONSIBLE FOR THE ACCURACY OR COMPLETENESS OF SCANNED COPIES OF THIS PLAN SHEET.

NOTE:

FOR ACCURATE RIGHT OF WAY DATA, CONTACT RIGHT OF WAY ENGINEERING AT THE DISTRICT OFFICE.

NOTES:

1. THIS PLAN SHEET APPLIES TO BRIDGE No. 28-0153L ONLY.
2. UTILITIES SHOWN ARE AT THE BRIDGE DECK ONLY.

LEGEND:

—e—e— EXISTING ELECTRICAL LINE
—w— EXISTING WATER LINE

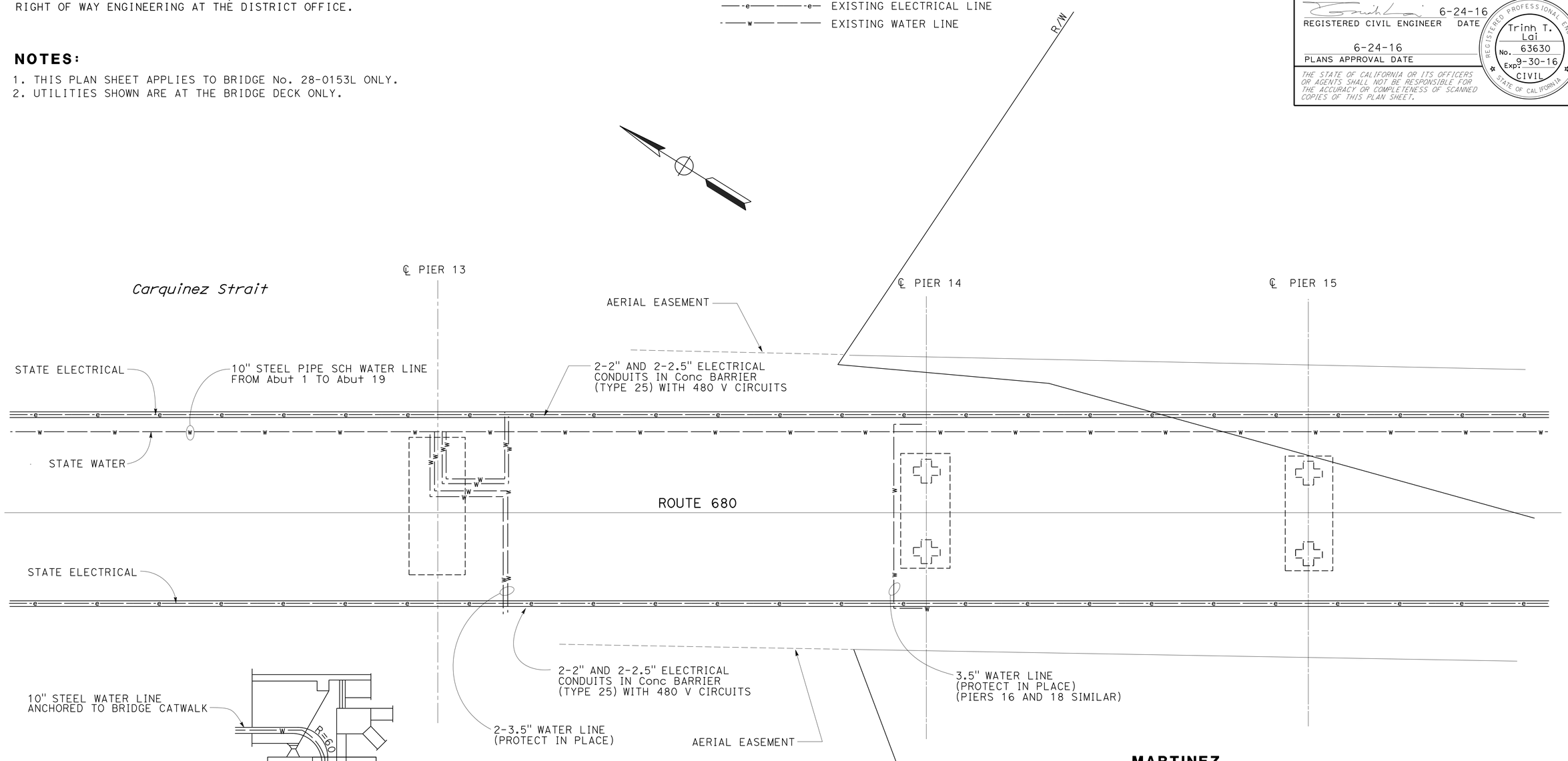

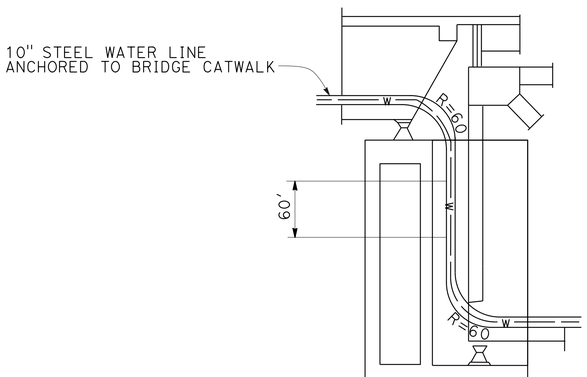

WATER LINE EXPANSION JOINT AT PIERS 3 AND 13

UTILITY PLAN

NO SCALE

THIS PLAN TO BE USED FOR UTILITY INFORMATION ONLY

U-1

FC	3-28-16
REVISED BY	DATE REVISED
TRINH LAI	GORDON JEONG
CALCULATED-DESIGNED BY	CHECKED BY
FUNCTIONAL SUPERVISOR	HANNA KHOURY

STATE OF CALIFORNIA - DEPARTMENT OF TRANSPORTATION
Caltrans®
DESIGN

LAST REVISION 03-29-16
DATE PLOTTED => 27-JUN-2016
TIME PLOTTED => 08:10

Dist	COUNTY	ROUTE	POST MILES TOTAL PROJECT	SHEET No.	TOTAL SHEETS
04	CC, Sol	680	25.0/25.4, 0.0/0.6	4	14

Jeri-Paul Fabian 6-24-16
REGISTERED CIVIL ENGINEER DATE

6-24-16
PLANS APPROVAL DATE

REGISTERED PROFESSIONAL ENGINEER Jeri-Paul F. Fabian No. 81174 Exp. 9-30-17 CIVIL STATE OF CALIFORNIA

THE STATE OF CALIFORNIA OR ITS OFFICERS OR AGENTS SHALL NOT BE RESPONSIBLE FOR THE ACCURACY OR COMPLETENESS OF SCANNED COPIES OF THIS PLAN SHEET.

STATIONARY MOUNTED CONSTRUCTION AREA SIGNS

SIGN No.	MUTCD CODE	SIGN MESSAGE	PANEL SIZE	NUMBER OF POSTS AND SIZE	No. OF SIGNS
A	W20-1	ROAD WORK AHEAD	48" x 48"	(ONE) 6" x 6"	2
B	G20-2	END ROAD WORK	48" x 24"	(ONE) 4" x 4"	1

NOTE:

1. EXACT LOCATION AND POSITION OF CONSTRUCTION AREA SIGNS TO BE DETERMINED BY THE ENGINEER.

LEGEND:

☐ CONSTRUCTION AREA SIGN DESIGNATION

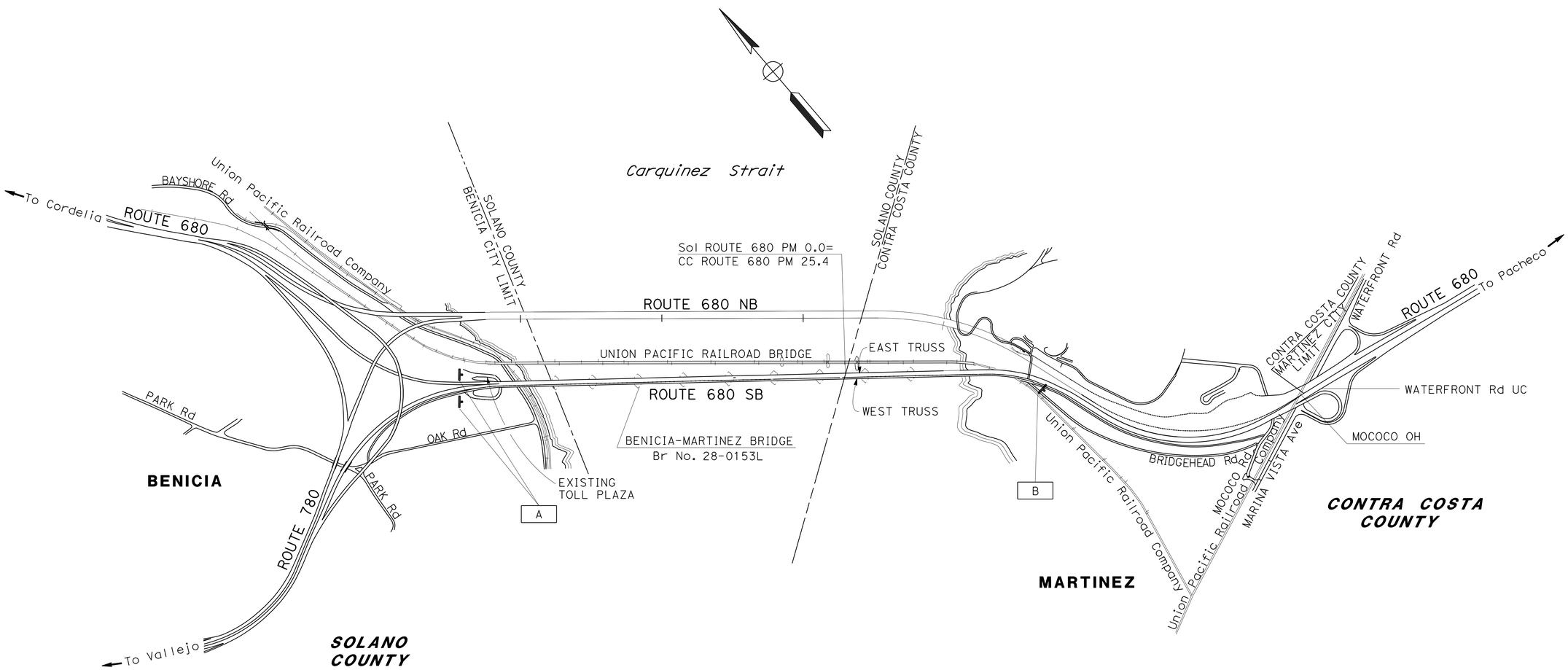

CONSTRUCTION AREA SIGNS

NO SCALE

APPROVED FOR CONSTRUCTION AREA SIGN WORK ONLY

CS-1

STATE OF CALIFORNIA - DEPARTMENT OF TRANSPORTATION
Caltrans®
TRAFFIC

FUNCTIONAL SUPERVISOR: LOURDES DAVID
CALCULATED-DESIGNED BY: JERI-PAUL FABIAN
CHECKED BY: CLAUDIA FANG
REVISED BY: LD
DATE REVISED: 6-22-16

LAST REVISION 05-03-16
DATE PLOTTED => 27-JUN-2016
TIME PLOTTED => 08:10

M

Maint	MAINTENANCE
Max	MAXIMUM
MB	METAL BEAM
MBB	METAL BEAM BARRIER
MBGR	METAL BEAM GUARD RAILING
Med	MEDIAN
MGS	MIDWEST GUARDRAIL SYSTEM
MH	MANHOLE
Min	MINIMUM
Misc	MISCELLANEOUS
Misc I & S	MISCELLANEOUS IRON AND STEEL
Mkr	MARKER
Mod	MODIFIED,
	MODIFY
Mon	MONUMENT
MP	METAL PLATE
MPGR	METAL PLATE GUARD RAILING
MR	MOVEMENT RATING
MSE	MECHANICALLY STABILIZED EMBANKMENT
Mt	MOUNTAIN, MOUNT
Mtl	MATERIAL
MVP	MAINTENANCE VEHICLE PULLOUT

N

N	NORTH
NB	NORTHBOUND
No.	NUMBER (MUST HAVE PERIOD)
Nos.	NUMBERS (MUST HAVE PERIOD)
NPS	NOMINAL PIPE SIZE
NS	NEAR SIDE
NSP	NEW STANDARD PLAN
NTS	NOT TO SCALE

O

Oblr	OBLITERATE
OC	OVERCROSSING
OD	OUTSIDE DIAMETER
OF	OUTSIDE FACE
OG	ORIGINAL GROUND
OGAC	OPEN GRADED ASPHALT CONCRETE
OGFC	OPEN GRADED FRICTION COURSE
OH	OVERHEAD
OHWM	ORDINARY HIGH WATER MARK
O-O	OUT TO OUT
Opp	OPPOSITE
OSD	OVERSIDE DRAIN

P

P	PAGE
PAP	PERFORATED ALUMINUM PIPE
PB	PULL BOX
PC	POINT OF CURVATURE,
	PRECAST
PCC	POINT OF COMPOUND CURVE,
	PORTLAND CEMENT CONCRETE
PCMS	PORTABLE CHANGEABLE MESSAGE SIGN
PCP	PERFORATED CONCRETE PIPE,
	PRESTRESSED CONCRETE PIPE
PCVC	POINT OF COMPOUND VERTICAL CURVE
PEC	PERMIT TO ENTER AND CONSTRUCT
Ped	PEDESTRIAN
Ped OC	PEDESTRIAN OVERCROSSING
Ped UC	PEDESTRIAN UNDERCROSSING
Perm Mtl	PERMEABLE MATERIAL

P continued

PG	PROFILE GRADE
PI	POINT OF INTERSECTION
PJP	PARTIAL JOINT PENETRATION
Pkwy	PARKWAY
ℙ,PL	PLATE
P/L	PROPERTY LINE
PM	POST MILE,
	TIME FROM NOON TO MIDNIGHT
PN	PAVING NOTCH
POC	POINT OF HORIZONTAL CURVE
POT	POINT OF TANGENT
POVC	POINT OF VERTICAL CURVE
PP	PIPE PILE,
	PLASTIC PIPE,
	POWER POLE
PPL	PREFORMED PERMEABLE LINER
PPP	PERFORATED PLASTIC PIPE
PRC	POINT OF REVERSE CURVE
PRF	PAVEMENT REINFORCING FABRIC
PRVC	POINT OF REVERSE VERTICAL CURVE
PS&E	PLANS, SPECIFICATIONS AND ESTIMATES
PS, P/S	PRESTRESSED
PSP	PERFORATED STEEL PIPE
PT	POINT OF TANGENCY
PVC	POLYVINYL CHLORIDE
Pvmt	PAVEMENT

Q

Qty	QUANTITY

R

R	RADIUS
R & D	REMOVE AND DISPOSE
R & S	REMOVE AND SALVAGE
R/C	RATE OF CHANGE
RCA	REINFORCED CONCRETE ARCH
RCB	REINFORCED CONCRETE BOX
RCP	REINFORCED CONCRETE PIPE
RCPA	REINFORCED CONCRETE PIPE ARCH
Rd	ROAD
Reinf	REINFORCED,
	REINFORCEMENT,
	REINFORCING
Rel	RELOCATE
Repl	REPLACEMENT
Ret	RETAINING
Rev	REVISED, REVISION
Rdwy	ROADWAY
RHMA	RUBBERIZED HOT MIX ASPHALT
Riv	RIVER
RM	ROAD-MIXED
RP	RADIUS POINT,
	REFERENCE POINT
RR	RAILROAD
RSP	ROCK SLOPE PROTECTION,
	REVISED STANDARD PLAN
Rt	RIGHT
Rte	ROUTE
RW	REDWOOD,
	RETAINING WALL
R/W	RIGHT OF WAY
Rwy	RAILWAY

S

S	SOUTH,
	SUPPLEMENT
SAE	STRUCTURE APPROACH EMBANKMENT
Salv	SALVAGE
SAPP	STRUCTURAL ALUMINUM PLATE PIPE
SB	SOUTHBOUND
SC	SAND CUSHION
SCSP	SLOTTED CORRUGATED STEEL PIPE
SD	STORM DRAIN
Sec	SECOND,
	SECTION
Sep	SEPARATION
SG	SUBGRADE
Shld	SHOULDER
Sht	SHEET
Sim	SIMILAR
℄	STATION LINE
SM	SELECTED MATERIAL
Spec	SPECIAL,
	SPECIFICATIONS
SPP	SLOTTED PLASTIC PIPE
SS	SLOPE STAKE
SSBM	STRAP AND SADDLE BRACKET METHOD
SSD	STRUCTURAL SECTION DRAIN
SSPA	STRUCTURAL STEEL PLATE ARCH
SSPP	STRUCTURAL STEEL PLATE PIPE
SSPPA	STRUCTURAL STEEL PLATE PIPE ARCH
SSRP	STEEL SPIRAL RIB PIPE
St	STREET
Sta	STATION
STBB	SINGLE THRIE BEAM BARRIER
Std	STANDARD
Str	STRUCTURE
Surf	SURFACING
SW	SIDEWALK,
	SOUND WALL
Swr	SEWER
Sym	SYMMETRICAL
S4S	SURFACE 4 SIDES

T

T	SEMI-TANGENT
Tan	TANGENT
TBB	THRIE BEAM BARRIER
Tbr	TIMBER
TC	TOP OF CURB
TCB	TRAFFIC CONTROL BOX
TCE	TEMPORARY CONSTRUCTION EASEMENT
Tel	TELEPHONE
Temp	TEMPORARY
TG	TOP OF GRADE
Tot	TOTAL
TP	TELEPHONE POLE
TPB	TREATED PERMEABLE BASE
TPM	TREATED PERMEABLE MATERIAL
Trans	TRANSITION

T continued

TS	TRANSVERSE,
	TRAFFIC SIGNAL,
	TUBULAR STEEL
Typ	TYPICAL

U

UC	UNDERCROSSING
UD	UNDERDRAIN
UG	UNDERGROUND
UON	UNLESS OTHERWISE NOTED
UP	UNDERPASS

V

V	VALVE,
	DESIGN SPEED
Var	VARIABLE,
	VARIES
VC	VERTICAL CURVE
VCP	VITRIFIED CLAY PIPE
Vert	VERTICAL
Via	VIADUCT
Vol	VOLUME

W

W	WEST,
	WIDTH
WB	WESTBOUND
WH	WEEP HOLE
WM	WIRE MESH
WS	WATER SURFACE
WSP	WELDED STEEL PIPE
Wt	WEIGHT
WV	WATER VALVE
WW	WINGWALL
WWLOL	WINGWALL LAYOUT LINE

X

X Sec	CROSS SECTION
Xing	CROSSING

Y

Yr	YEAR
Yrs	YEARS

Dist	COUNTY	ROUTE	POST MILES TOTAL PROJECT	SHEET No.	TOTAL SHEETS
04	CC, Sol	680	25.0/25.4, 0.0/0.6	5	14

Grace M. Tsushima
REGISTERED CIVIL ENGINEER

July 19, 2013
PLANS APPROVAL DATE

REGISTERED PROFESSIONAL ENGINEER
Grace M. Tsushima
No. C49814
Exp. 9-30-14
CIVIL
STATE OF CALIFORNIA

THE STATE OF CALIFORNIA OR ITS OFFICERS OR AGENTS SHALL NOT BE RESPONSIBLE FOR THE ACCURACY OR COMPLETENESS OF SCANNED COPIES OF THIS PLAN SHEET.

TO ACCOMPANY PLANS DATED 6-24-16

UNIT OF MEASUREMENT SYMBOLS:

Some of the symbols used in the project plan quantity tables and in the Bid Item List are:

TABLE A

SYMBOL USED	DEFINITIONS
ACRE	ACRE
CF	CUBIC FOOT
CY	CUBIC YARD
EA	EACH
GAL	GALLON
LB	POUND
LF	LINEAR FOOT
SQFT	SQUARE FOOT
SQYD	SQUARE YARD
STA	100 FEET
TAB	TABLET
TON	2,000 POUNDS

Some of the symbols used in the plans other than in the project plan quantity tables are:

TABLE B

SYMBOL USED	DEFINITIONS
ksi	KIPS PER SQUARE INCH
ksf	KIPS PER SQUARE FOOT
psi	POUNDS PER SQUARE INCH
psf	POUNDS PER SQUARE FOOT
lb/ft^3, pcf	POUNDS PER CUBIC FOOT
tsf	TONS PER SQUARE FOOT
mph, MPH *	MILES PER HOUR
ø	NOMINAL DIAMETER
oz	OUNCE
lb	POUND
kip	1,000 POUNDS
cal	CALORIE
ft	FOOT OR FEET
gal	GALLON

* For use on a sign panel only

STATE OF CALIFORNIA
DEPARTMENT OF TRANSPORTATION

ABBREVIATIONS (SHEET 2 OF 2)

NO SCALE

RSP A10B DATED JULY 19, 2013 SUPERSEDES STANDARD PLAN A10B DATED MAY 20, 2011 - PAGE 2 OF THE STANDARD PLANS BOOK DATED 2010.

REVISED STANDARD PLAN RSP A10B

2010 REVISED STANDARD PLAN RSP A10B

6-7-13

Dist	COUNTY	ROUTE	POST MILES TOTAL PROJECT	SHEET No.	TOTAL SHEETS
04	CC, Sol	680	25.0/25.4, 0.0/0.6	6	14

REGISTERED CIVIL ENGINEER

July 19, 2013
PLANS APPROVAL DATE

REGISTERED PROFESSIONAL ENGINEER
Gurinderpal Bhullar
No. C48815
Exp. 9-30-14
CIVIL
STATE OF CALIFORNIA

THE STATE OF CALIFORNIA OR ITS OFFICERS OR AGENTS SHALL NOT BE RESPONSIBLE FOR THE ACCURACY OR COMPLETENESS OF SCANNED COPIES OF THIS PLAN SHEET.

TO ACCOMPANY PLANS DATED 6-24-16

2010 REVISED STANDARD PLAN RSP T9

TABLE 1

TAPER LENGTH CRITERIA AND CHANNELIZING DEVICE SPACING

SPEED (S)	MINIMUM TAPER LENGTH * FOR WIDTH OF OFFSET 12 FEET (W)				MAXIMUM CHANNELIZING DEVICE SPACING		
					X	Y	Z **
	TANGENT 2L	MERGING L	SHIFTING L/2	SHOULDER L/3	TAPER	TANGENT	CONFLICT
mph	ft	ft	ft	ft	ft	ft	ft
20	160	80	40	27	20	40	10
25	250	125	63	42	25	50	12
30	360	180	90	60	30	60	15
35	490	245	123	82	35	70	17
40	640	320	160	107	40	80	20
45	1080	540	270	180	45	90	22
50	1200	600	300	200	50	100	25
55	1320	660	330	220	55	110	27
60	1440	720	360	240	60	120	30
65	1560	780	390	260	65	130	32
70	1680	840	420	280	70	140	35

* - For other offsets, use the following merging taper length formula for L:
For speed of 40 mph or less, $L = WS^2/60$
For speed of 45 mph or more, $L = WS$

Where: L = Taper length in feet
W = Width of offset in feet
S = Posted speed limit, off-peak 85th-percentile speed prior to work starting, or the anticipated operating speed in mph

** - Use for taper and tangent sections where there are no pavement markings or where there is a conflict between existing pavement markings and channelizers (CA).

TABLE 2

LONGITUDINAL BUFFER SPACE AND FLAGGER STATION SPACING

SPEED *	Min D **	DOWNGRADE Min D ***		
		-3%	-6%	-9%
mph	ft	ft	ft	ft
20	115	116	120	126
25	155	158	165	173
30	200	205	215	227
35	250	257	271	287
40	305	315	333	354
45	360	378	400	427
50	425	446	474	507
55	495	520	553	593
60	570	598	638	686
65	645	682	728	785
70	730	771	825	891

* - Speed is posted speed limit, off-peak 85th-percentile speed prior to work starting, or the anticipated operating speed in mph

** - Longitudinal buffer space or flagger station spacing

*** - Use on sustained downgrade steeper than -3 percent and longer than 1 mile.

TABLE 3

ADVANCE WARNING SIGN SPACING

ROAD TYPE	DISTANCE BETWEEN SIGNS *		
	A	B	C
	ft	ft	ft
URBAN - 25 mph OR LESS	100	100	100
URBAN - MORE THAN 25 mph TO 40 mph	250	250	250
URBAN - MORE THAN 40 mph	350	350	350
RURAL	500	500	500
EXPRESSWAY / FREEWAY	1000	1500	2640

* - The distances are approximate, are intended for guidance purposes only, and should be applied with engineering judgment. These distances should be adjusted by the Engineer for field conditions, if necessary, by increasing or decreasing the recommmended distances.

STATE OF CALIFORNIA
DEPARTMENT OF TRANSPORTATION

TRAFFIC CONTROL SYSTEM TABLES FOR LANE AND RAMP CLOSURES

NO SCALE

RSP T9 DATED JULY 19, 2013 SUPERSEDES RSP T9 DATED APRIL 19, 2013 THAT SUPPLEMENTS THE STANDARD PLANS BOOK DATED 2010.

REVISED STANDARD PLAN RSP T9

4-30-13

TO ACCOMPANY PLANS DATED 6-24-16

Dist	COUNTY	ROUTE	POST MILES TOTAL PROJECT	SHEET No.	TOTAL SHEETS
04	CC, Sol	680	25.0/25.4, 0.0/0.6	7	14

REGISTERED CIVIL ENGINEER

April 19, 2013
PLANS APPROVAL DATE

REGISTERED PROFESSIONAL ENGINEER Gurinderpal Bhullar No. C48815 Exp. 9-30-14 CIVIL STATE OF CALIFORNIA

THE STATE OF CALIFORNIA OR ITS OFFICERS OR AGENTS SHALL NOT BE RESPONSIBLE FOR THE ACCURACY OR COMPLETENESS OF SCANNED COPIES OF THIS PLAN SHEET.

NOTES:

See Revised Standard Plan RSP T9 for tables.

Use cone spacing X for taper segment, Y for tangent segment or Z for conflict situations, as approriate, per Table 1, unless X, Y, or Z cone spacing is shown on this sheet.

Unless otherwise specified in the special provisions, all temporary warning signs shall have black legend on fluorescent orange background.

California codes are designated by (CA). Otherwise, Federal (MUTCD) codes are shown.

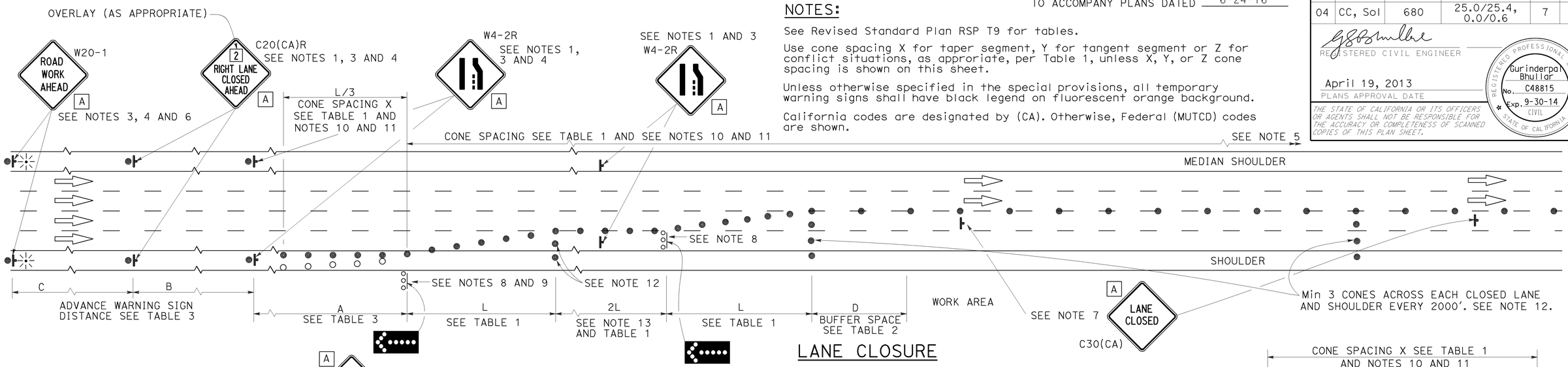

LANE CLOSURE

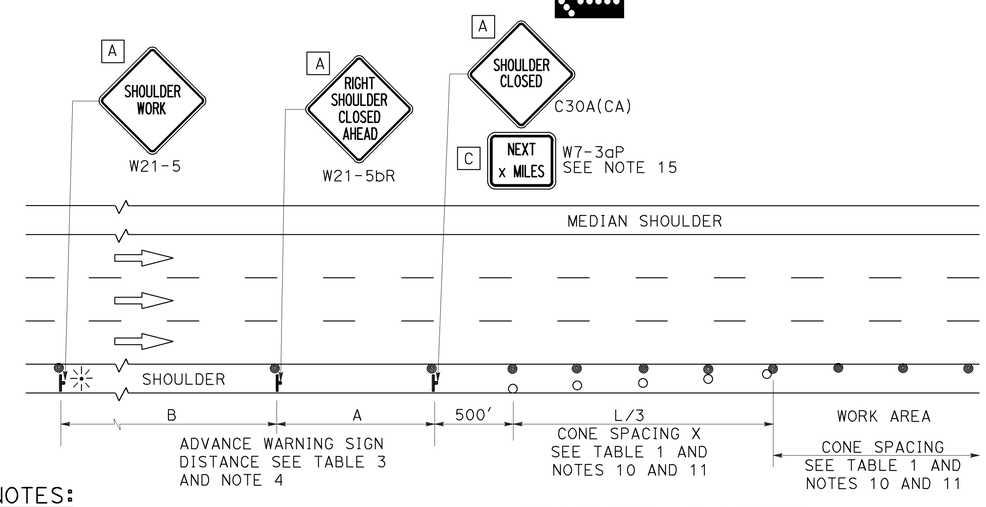

SHOULDER CLOSURE

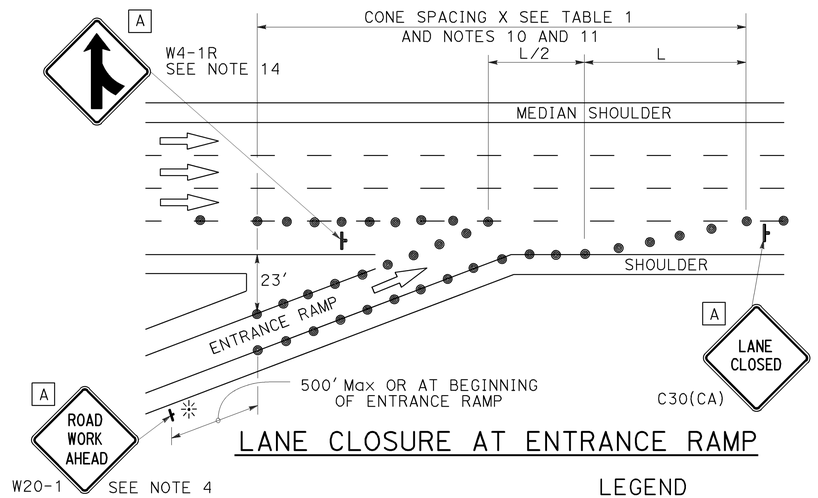

LANE CLOSURE AT ENTRANCE RAMP

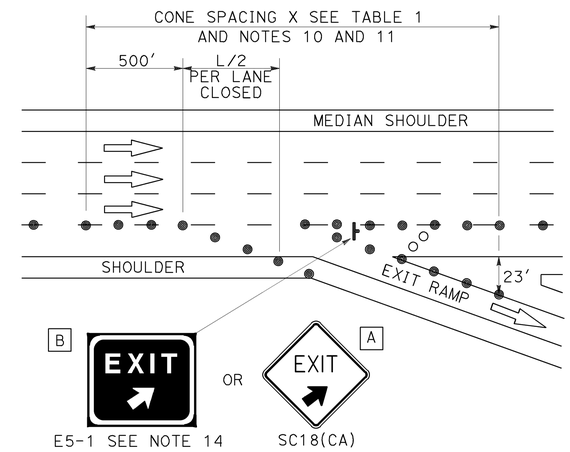

LANE CLOSURE AT EXIT RAMP

NOTES:

1. Median lane closures shall conform to the details as shown except that C20(CA)L and W4-2L signs shall be used.
2. At least one person shall be assigned to provide full time maintenance of traffic control devices for lane closures.
3. Duplicate sign installations are not required:
   a) On opposite shoulder if at least one-half of the available lanes remain open to traffic.
   b) In the median if the width of the median shoulder is less than 8' and the outside lanes are to be closed.
4. Each advance warning sign on each side of the roadway shall be equipped with at least two flags for daytime closure. Each flag shall be at least 16" x 16" in size and shall be orange or fluorescent red-orange in color. Flashing beacons shall be placed at the locations indicated for lane closure during hours of darkness.
5. A G20-2 "END ROAD WORK" sign, with minimum size of 48" x 24" as appropriate, shall be placed at the end of the lane closure unless the end of work area is obvious or ends within a larger project's limits.
6. If the W20-1 sign would follow within 2000' of a stationary W20-1 or G20-1 "ROAD WORK NEXT _____ MILES", use a C20(CA) sign for the first advance warning sign.
7. Place a C30(CA) sign every 2000' throughout length of lane closure.
8. One flashing arrow sign for each lane closed. The flashing arrow signs shall be Type I.
9. A minimum 1500' of sight distance shall be provided where possible for vehicles approaching the first flashing arrow sign. Lane closures shall not begin at top of crest vertical curve or on a horizontal curve.
10. All cones used for lane closures during the hours of darkness shall be fitted with retroreflective bands (or sleeves) as specified in the specifications.
11. Portable delineators, placed at one-half the spacing indicated for traffic cones may be used instead of cones for daytime closures only.
12. Unless otherwise specified in the special provisions, a minimum of 3 cones shall be placed transversely across each closed lane and shoulder at each location where a taper across a traffic lane ends and every 2000' as shown on the "Lane Closure" detail. Two Type II barricades may be used instead of the 3 cones. The transverse alignment of the cones or barricades on the closed shoulder may be shifted from the transverse alignment to provide access to the work.
13. Unless otherwise specified in the special provisions, the 2L tangent shown along lane lines shall be used between the L tapers required for each closed traffic lane.
14. Unless otherwise specified in the special provisions, the E5-1 or SC18(CA) and W4-1 signs shall be used as shown.
15. A W7-3aP "NEXT____ MILES" plaque must be used if theshoulder closure extends beyond the distance that can be perceived by road users.

LEGEND

- TRAFFIC CONE
- TRAFFIC CONE (OPTIONAL TAPER)
- TEMPORARY TRAFFIC CONTROL SIGN
- FLASHING ARROW SIGN (FAS)
- FAS SUPPORT OR TRAILER
- PORTABLE FLASHING BEACON

SIGN PANEL SIZE (Min)

A	48" x 48"
B	72" x 60"
C	36" x 30"

STATE OF CALIFORNIA
DEPARTMENT OF TRANSPORTATION

TRAFFIC CONTROL SYSTEM FOR LANE CLOSURE ON FREEWAYS AND EXPRESSWAYS

NO SCALE

RSP T10 DATED APRIL 19, 2013 SUPERSEDES STANDARD PLAN T10 DATED MAY 20, 2011 - PAGE 237 OF THE STANDARD PLANS BOOK DATED 2010.

REVISED STANDARD PLAN RSP T10

2010 REVISED STANDARD PLAN RSP T10

12-18-12

DIST	COUNTY	ROUTE	POST MILES TOTAL PROJECT	SHEET No.	TOTAL SHEETS
04	CC, Sol	680	25.0/25.4, 0.0/0.6	8	14

Muthanna S. Omran 05-02-16
REGISTERED CIVIL ENGINEER DATE

6-24-16
PLANS APPROVAL DATE

REGISTERED PROFESSIONAL ENGINEER MUTHANNA S. OMRAN No. 61637 Exp. 06-30-17 CIVIL STATE OF CALIFORNIA

The State of California or its officers or agents shall not be responsible for the accuracy or completeness of scanned copies of this plan sheet.

LOCATION AND TYPE OF WORK

(A) Strengthen connection of bevel to spacer plates of the existing isolator bearings, clean and paint portions of steel members.

(B) Strengthen connections between stringer and floor beam, clean and paint portions of steel members.

QUANTITIES

LEAD COMPLIANCE PLAN	LUMP SUM
WORK AREA MONITORING (BRIDGE)	LUMP SUM
BRIDGE REMOVAL (PORTION)	LUMP SUM
TEMPORARY SUPPORT	LUMP SUM
FURNISH STRUCTURAL STEEL (BRIDGE)	2,133 LB
ERECT STRUCTURAL STEEL (BRIDGE)	2,133 LB
CLEAN AND PAINT STRUCTURAL STEEL	LUMP SUM
CLEAN AND PAINT STRUCTURAL STEEL (EXISTING BRIDGE)	LUMP SUM

LEGEND:

-·-·-·- Indicates Existing Structure

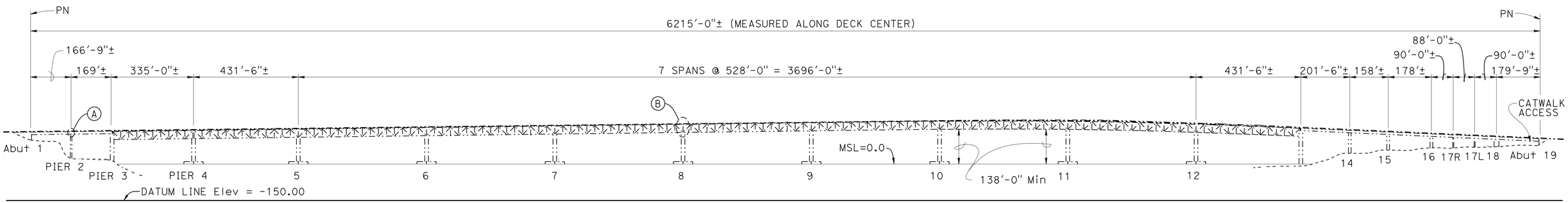

ELEVATION

1" = 200'

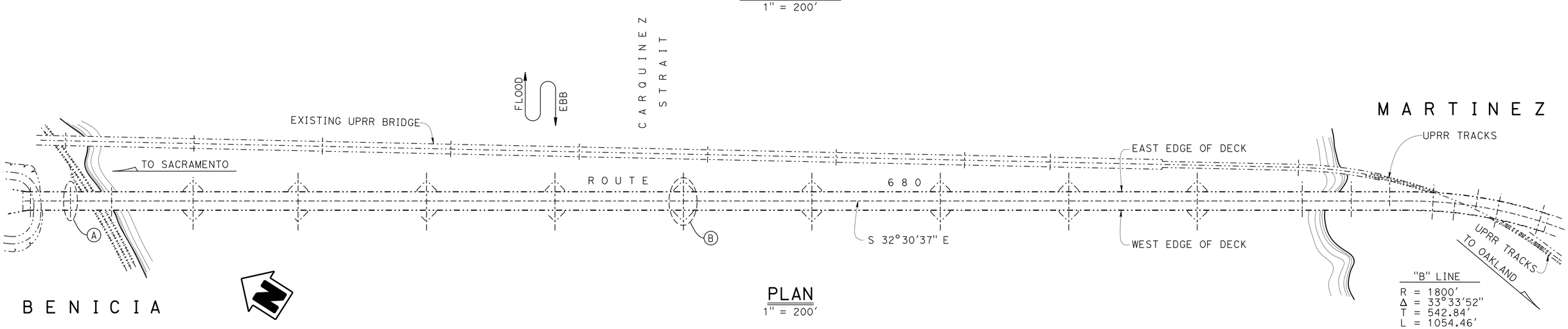

PLAN

1" = 200'

NOTE: Northbound 680 not shown.

NOTE:
Existing catwalk limits are from Abutment 1 to Abutment 19.

NOTE:
THE CONTRACTOR MUST VERIFY ALL CONTROLLING FIELD DIMENSIONS BEFORE ORDERING OR FABRICATING ANY MATERIAL

FLOOR BEAM AND BEARING RETROFIT

BENICIA-MARTINEZ BRIDGE

GENERAL PLAN

	BY	CHECKED
DESIGN	Muthanna Omran	John E. Peterson
DETAILS	F. Maagma / C. Cancino	John E. Peterson
QUANTITIES	Muthanna Omram	John E. Peterson

LOAD & RESISTANCE FACTOR DESIGN — LIVE LOADING: HL93 W/"LOW-BOY"; PERMIT DESIGN VEHICLE

	BY	CHECKED
LAYOUT	Muthanna Omram	Sameh Hegazi
SPECIFICATIONS	S. Nelapatla	PLANS AND SPECS COMPARED X

HØGNI SETBERG
DESIGN ENGINEER

ORIGINAL SCALE IN INCHES FOR REDUCED PLANS 0 1 2 3

STATE OF CALIFORNIA
DEPARTMENT OF TRANSPORTATION

DIVISION OF ENGINEERING SERVICES
STRUCTURE DESIGN
DESIGN BRANCH 8

BRIDGE NO. 28-0153L
POST MILE 25.0/25.4, 0.0/0.6

UNIT: 3593
PROJECT NUMBER & PHASE: 0412000062-1
CONTRACT NO.: 04-3G4624

DISREGARD PRINTS BEARING EARLIER REVISION DATES

REVISION DATES: 01-06-16 04-21-16 03-30-16

SHEET 1 OF 7

STRUCTURES DESIGN GENERAL PLAN SHEET (ENGLISH) (REV.09-01-10)

FILE => 28-0153l-a-gp.dgn

USERNAME => s141070 DATE PLOTTED => 27-JUN-2016 TIME PLOTTED => 08:10

DIST	COUNTY	ROUTE	POST MILES TOTAL PROJECT	SHEET No.	TOTAL SHEETS
04	CC, Sol	680	25.0/25.4, 0.0/0.6	9	14

Muthanna S. Omran 05-02-16
REGISTERED CIVIL ENGINEER DATE

6-24-16
PLANS APPROVAL DATE

REGISTERED PROFESSIONAL ENGINEER MUTHANNA S. OMRAN No. 61637 Exp. 06-30-17 CIVIL STATE OF CALIFORNIA

The State of California or its officers or agents shall not be responsible for the accuracy or completeness of scanned copies of this plan sheet.

INDEX TO PLANS

SHEET NO	TITLE
1	GENERAL PLAN
2	INDEX TO PLANS
3	ISOLATOR BEARING REPAIR PIER 2
4	ISOLATOR BEARING REPAIR DETAILS
5	FLOOR BEAM CONNECTION PIER 8
6	FLOOR BEAM CONNECTION DETAILS NO. 1
7	FLOOR BEAM CONNECTION DETAILS NO. 2

STANDARD PLANS 2010 EDITION

PLAN NO.	PLAN TITLE
A10A	ABBREVIATIONS (SHEET 1 OF 2)
RSP A10B	ABBREVIATIONS (SHEET 2 OF 2)
A10C	LINES AND SYMBOLS (SHEET 1 OF 3)
A10D	LINES AND SYMBOLS (SHEET 2 OF 3)
A10E	LINES AND SYMBOLS (SHEET 3 OF 3)

STANDARD PLAN NO.

DETAIL NO.

GENERAL NOTES
LOAD AND RESISTANCE FACTOR DESIGN

DESIGN:
AASHTO LRFD Bridge Design Specifications, 2012, (6th Edition) with California Amendments (AASHTO-CA BDS-6)

LIVE LOADING:
HL93 and permit design load.

STRUCTURAL STEEL (New):
fy = 50 ksi

STRUCTURAL STEEL (Existing):
(assumed for evaluation of existing structure):
fy = 50 ksi

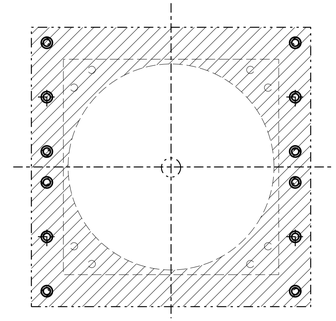

REFLECTED PLAN VIEW OF SPACER PLATE

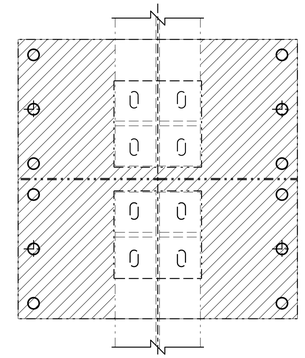

PLAN VIEW OF BEVEL PLATE

LEGEND:

Indicates limits of clean and paint structural steel (existing bridge). Work includes blast cleaning and painting undercoat within the limits shown. All surfaces of new structural steel must be galvanized and painted.

LOCATION A - LIMITS OF PAYMENT
No Scale

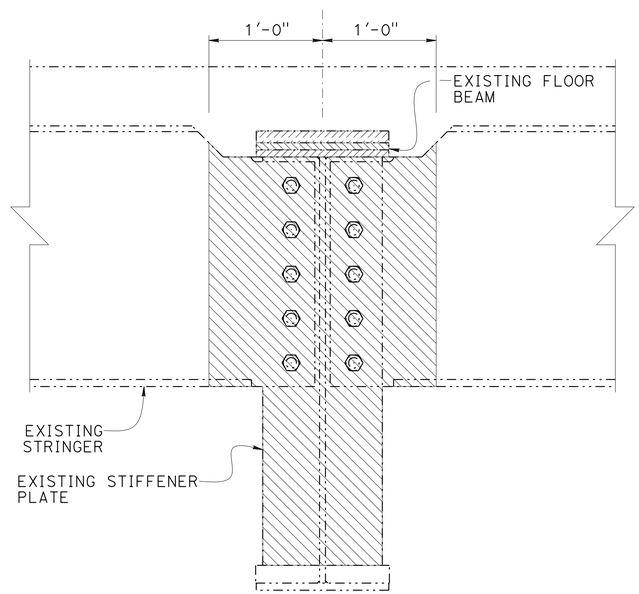

SECTION THRU FLOOR BEAM

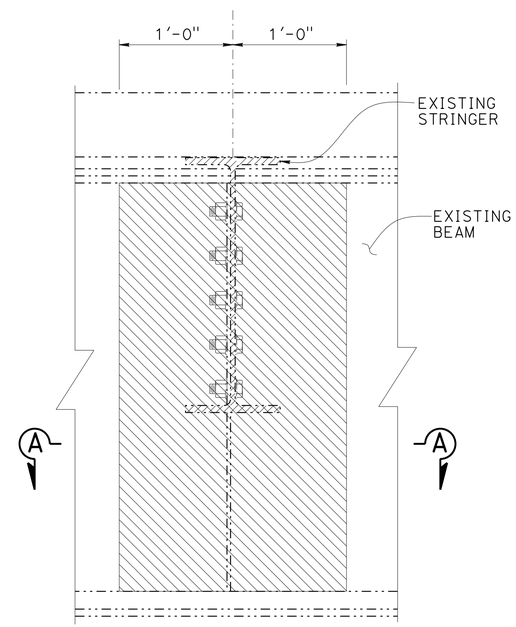

SECTION THRU STRINGER

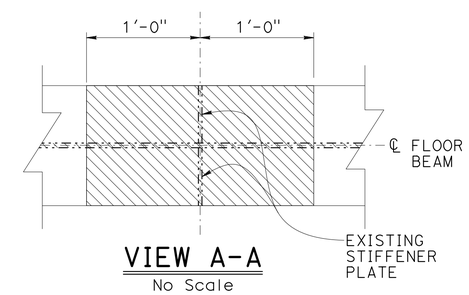

VIEW A-A
No Scale

LEGEND:

Indicates limits of clean and paint structural steel (existing bridge). Work includes blast cleaning and painting undercoat within the limits shown. All sides of all exposed surfaces within the limits shown are included in the work. All surfaces of new structural steel must be galvanized and painted.

LOCATION B - LIMITS OF PAYMENT
No Scale

NOTE:
THE CONTRACTOR MUST VERIFY ALLCONTROLLING FIELD DIMENSIONS BEFORE ORDERING OR FABRICATING ANY MATERIAL

	BY	CHECKED
DESIGN	Muthanna Omran	John E. Peterson
DETAILS	F. Maagma / C. Cancino	John E. Peterson
QUANTITIES	Muthanna Omran	John E. Peterson

STATE OF CALIFORNIA
DEPARTMENT OF TRANSPORTATION

DIVISION OF ENGINEERING SERVICES
STRUCTURE DESIGN
DESIGN BRANCH 8

BRIDGE NO. 28-0153L
POST MILE 25.0/25.4, 0.0/0.6

FLOOR BEAM AND BEARING RETROFIT
BENICIA-MARTINEZ BRIDGE
INDEX TO PLANS

STRUCTURES DESIGN DETAIL SHEET (ENGLISH) (REV. 09-01-10)

ORIGINAL SCALE IN INCHES FOR REDUCED PLANS 0 1 2 3

UNIT: 3593
PROJECT NUMBER & PHASE: 0412000062-1
CONTRACT NO.: 04-3G4624

DISREGARD PRINTS BEARING EARLIER REVISION DATES

REVISION DATES: 01-06-16 04-29-16 03-24-16

SHEET 2 OF 7

FILE => 28-0153l-a-itp.dgn

USERNAME => s141070 DATE PLOTTED => 27-JUN-2016 TIME PLOTTED => 08:10

DIST	COUNTY	ROUTE	POST MILES TOTAL PROJECT	SHEET No.	TOTAL SHEETS
04	CC, Sol	680	25.0/25.4, 0.0/0.6	10	14

Muthanna S. Omran 05-02-16
REGISTERED CIVIL ENGINEER DATE

6-24-16
PLANS APPROVAL DATE

REGISTERED PROFESSIONAL ENGINEER
MUTHANNA S. OMRAN
No. 61637
Exp. 06-30-17
CIVIL
STATE OF CALIFORNIA

The State of California or its officers or agents shall not be responsible for the accuracy or completeness of scanned copies of this plan sheet.

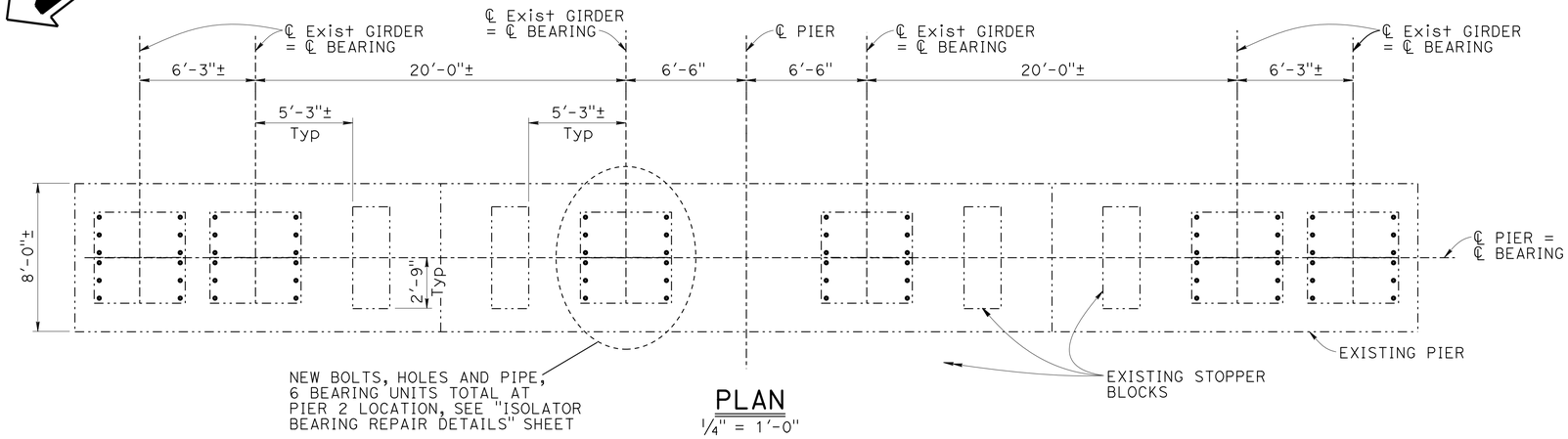

PLAN
1/4" = 1'-0"

NOTE: Catwalk not shown.

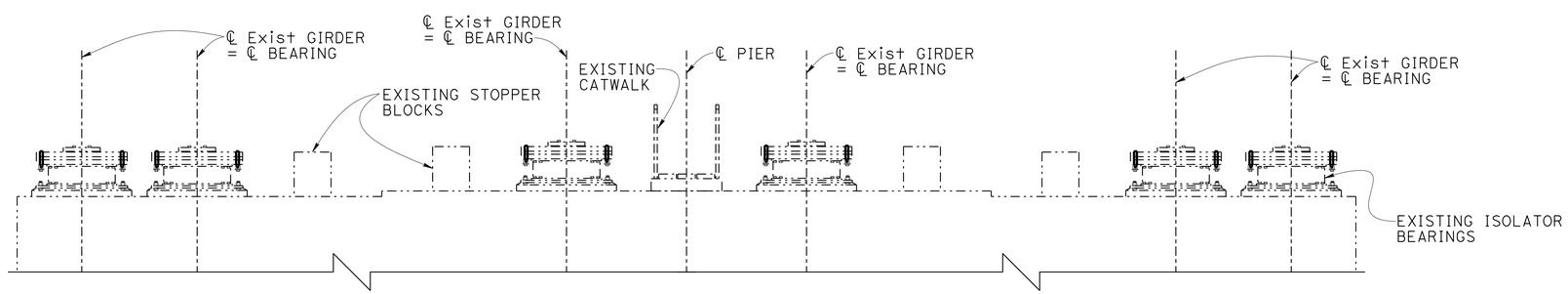

ELEVATION
1/4" = 1'-0"

LEGEND:

——— Indicates new structure

—·—·— Indicates existing structure

NOTES:

1. Repair applies to all existing bearings of Pier 2.
2. See "ISOLATOR BEARING REPAIR DETAILS" sheet for details not shown.

CONSTRUCTION SEQUENCE FOR LOCATION (A)

Perform isolator bearing repair in the following sequence:

1. Install containment for paint work.
2. Clean, spot blast clean and paint undercoat existing structural steel.
3. Remove no more than 2 existing bolts at a given isolator bearing at the same time. Clean, spot blast clean and paint undercoat the areas of structural steel that were covered by the existing bolts.
4. Drill new holes. Install pipes and grind flush. Install new bolt assemblies. Clean and repair undercoat.
5. Paint finish coats.

NOTE:
THE CONTRACTOR MUST VERIFY ALL CONTROLLING FIELD DIMENSIONS BEFORE ORDERING OR FABRICATING ANY MATERIAL

	BY	CHECKED
DESIGN	Muthanna Omran	John E. Peterson
DETAILS	F. Maagma / C. Cancino	John E. Peterson
QUANTITIES	Muthanna Omran	John E. Peterson

STATE OF CALIFORNIA
DEPARTMENT OF TRANSPORTATION

DIVISION OF ENGINEERING SERVICES
STRUCTURE DESIGN
DESIGN BRANCH 8

BRIDGE NO. 28-0153L
POST MILE 25.0/25.4, 0.0/0.6

FLOOR BEAM AND BEARING RETROFIT
BENICIA-MARTINEZ BRIDGE
ISOLATOR BEARING REPAIR PIER 2

STRUCTURES DESIGN DETAIL SHEET (ENGLISH) (REV. 09-01-10)

ORIGINAL SCALE IN INCHES FOR REDUCED PLANS 0 1 2 3

UNIT: 3593
PROJECT NUMBER & PHASE: 0412000062-1
CONTRACT NO.: 04-3G4624

DISREGARD PRINTS BEARING EARLIER REVISION DATES

REVISION DATES: 01-06-16 03-24-16 03-22-16

SHEET 3 OF 7

FILE => 28-0153l-q-isobrgr_p02.dgn

USERNAME => s141070 DATE PLOTTED => 27-JUN-2016 TIME PLOTTED => 08:10

DIST	COUNTY	ROUTE	POST MILES TOTAL PROJECT	SHEET No.	TOTAL SHEETS
04	CC, Sol	680	25.0/25.4, 0.0/0.6	11	14

Muthanna S. Omran 05-02-16
REGISTERED CIVIL ENGINEER DATE

6-24-16
PLANS APPROVAL DATE

REGISTERED PROFESSIONAL ENGINEER MUTHANNA S. OMRAN No. 61637 Exp. 06-30-17 CIVIL STATE OF CALIFORNIA

The State of California or its officers or agents shall not be responsible for the accuracy or completeness of scanned copies of this plan sheet.

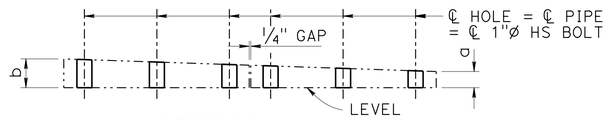

SECTION A-A
1" = 1'-0"

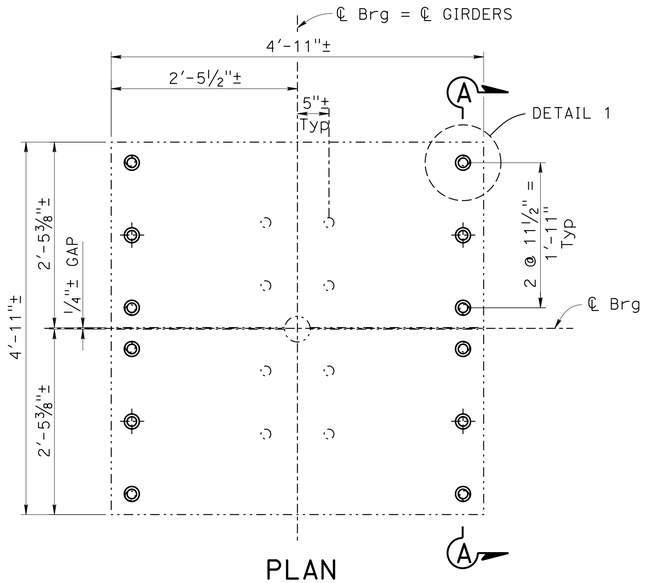

PLAN

BEVEL PLATE DETAIL
1" = 1'-0"

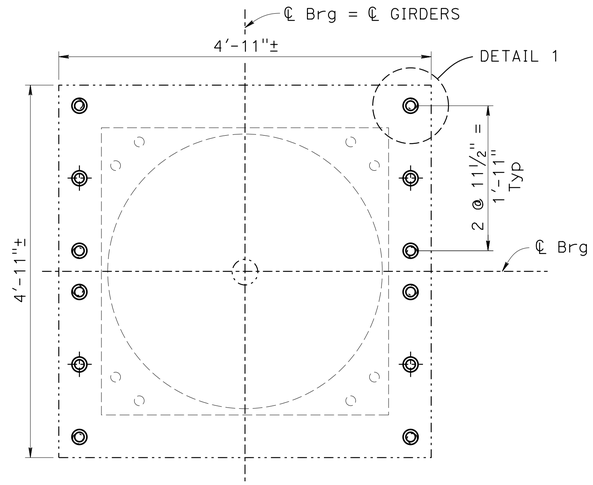

PLAN

SPACER PLATE DETAIL
1" = 1'-0"

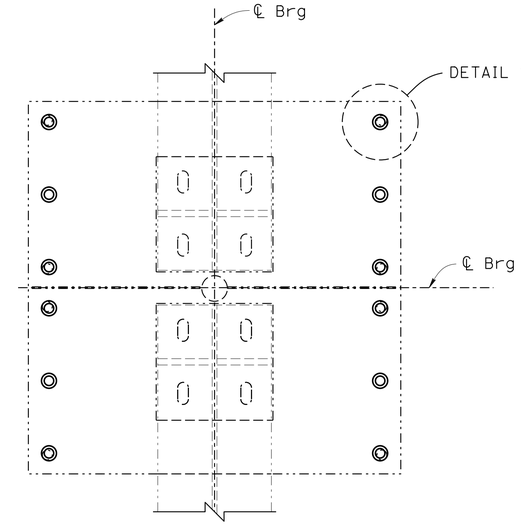

VIEW B-B
1" = 1'-0"

LEGEND:

- Indicates new Structure
- Indicates existing Structure
- Indicates new bolt and new hole at existing bolt location
- Indicates new bolt and new hole

EXISTING BEVEL PLATE DIMENSIONS		
LOCATION	a (INCH)	b (INCH)
PIER 2	3	3 3/4±

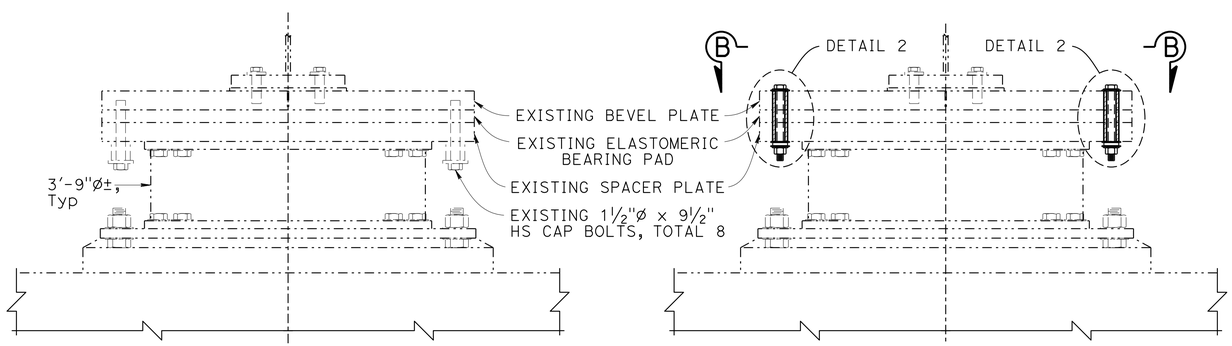

EXISTING

NEW

ELEVATION PIER 2

ISOLATOR BEARING DETAIL
1" = 1'-0"

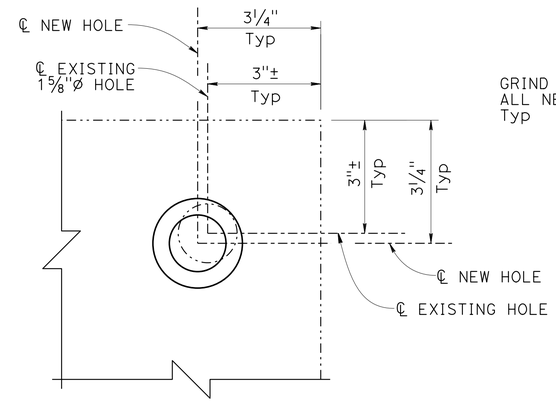

DETAIL 1
6" = 1'-0"

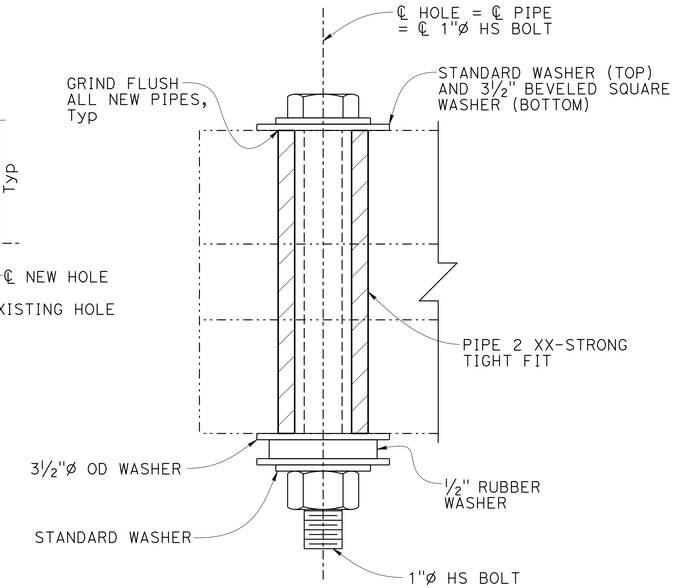

DETAIL 2
6" = 1'-0"

NOTES:

1. All new steel must be galvanized.
2. For "CONSTRUCTION SEQUENCE FOR LOCATION (A)", see "ISOLATOR BEARING REPAIR PIER 2" sheet.
3. Tensioned bolts must be snug tight.

NOTE:
THE CONTRACTOR MUST VERIFY ALL CONTROLLING FIELD DIMENSIONS BEFORE ORDERING OR FABRICATING ANY MATERIAL

	BY	CHECKED
DESIGN	Muthanna Omran	John E. Peterson
DETAILS	F. Maagma / C. Cancino	John E. Peterson
QUANTITIES	Muthanna Omran	John E. Peterson

STATE OF CALIFORNIA
DEPARTMENT OF TRANSPORTATION

DIVISION OF ENGINEERING SERVICES
STRUCTURE DESIGN
DESIGN BRANCH 8

BRIDGE NO. 28-0153L
POST MILE 25.0/25.4, 0.0/0.6

FLOOR BEAM AND BEARING RETROFIT
BENICIA-MARTINEZ BRIDGE
ISOLATOR BEARING REPAIR DETAILS

STRUCTURES DESIGN DETAIL SHEET (ENGLISH) (REV. 09-01-10)

ORIGINAL SCALE IN INCHES FOR REDUCED PLANS 0 1 2 3

UNIT: 3593
PROJECT NUMBER & PHASE: 0412000062-1
CONTRACT NO.: 04-3G4624

DISREGARD PRINTS BEARING EARLIER REVISION DATES → 01-06-16 03-24-16 03-24-16

SHEET 4 OF 7

FILE => 28-0153l-q-isobrgrdt01.dgn

USERNAME => s141070 DATE PLOTTED => 27-JUN-2016 TIME PLOTTED => 08:10

DIST	COUNTY	ROUTE	POST MILES TOTAL PROJECT	SHEET No.	TOTAL SHEETS
04	CC, Sol	680	25.0/25.4, 0.0/0.6	12	14

Muthanna S. Omran 05-02-16
REGISTERED CIVIL ENGINEER DATE

6-24-16
PLANS APPROVAL DATE

REGISTERED PROFESSIONAL ENGINEER MUTHANNA S. OMRAN No. 61637 Exp. 06-30-17 CIVIL STATE OF CALIFORNIA

The State of California or its officers or agents shall not be responsible for the accuracy or completeness of scanned copies of this plan sheet.

TEMPORARY SUPPORTS:

At location B, install temporary supports to hold up stringers before Group X bolts can be removed. Each support must provide a vertical capacity of at least 67 kips (service I) per stringer. This force must be uniformly distributed and resulting\ pressure on the deck must not exceed 400 psi. Holes may be drilled through the deck and must not exceed 2 inches in diameter and must be spaced at 12 inch minimum in any direction. Provide 1/4" thick neoprene pads between the temporary support and the deck surface. For installing the temporary support, welding to and drilling through any existing steel member is not allowed.

LEGEND:

——— Indicates new Structure

-·-·-·- Indicates existing Structure

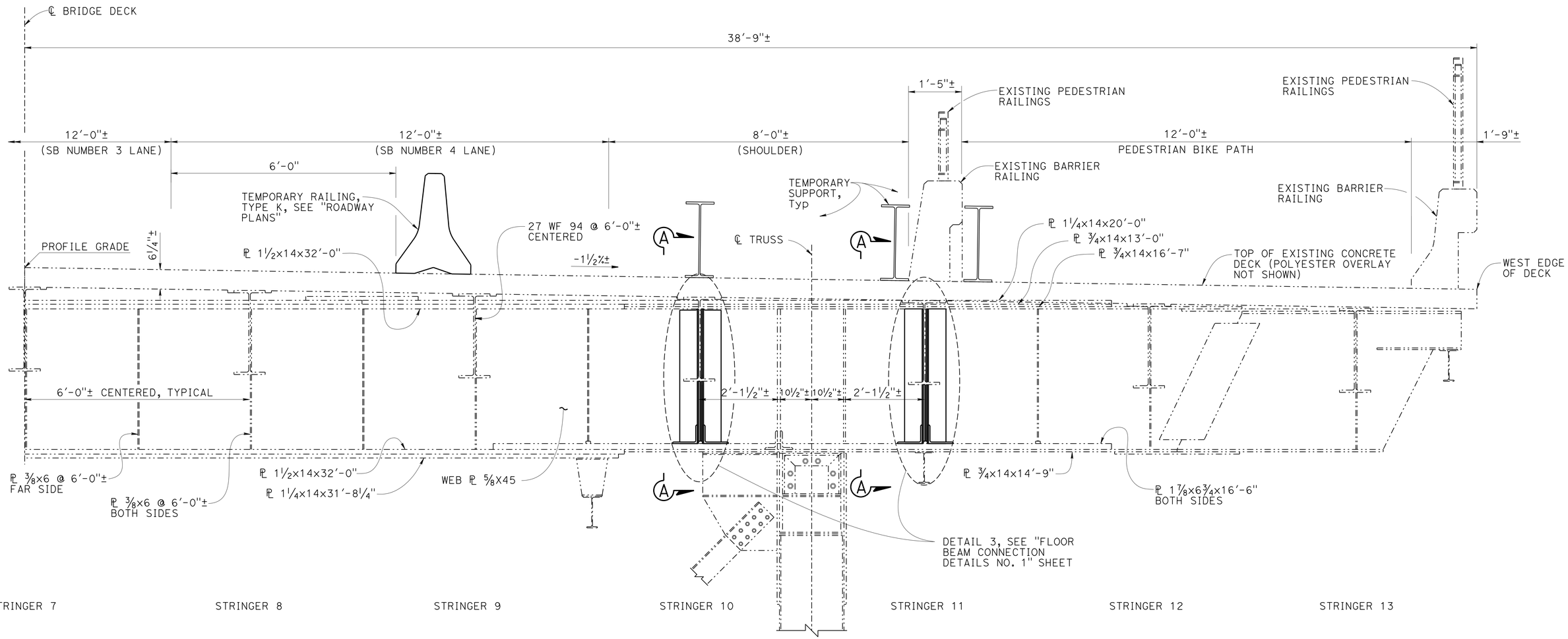

PARTIAL FLOOR BEAM ELEVATION

¾" = 1'-0"
(LOOKING SOUTH)

NOTE:
THE CONTRACTOR MUST VERIFY ALL CONTROLLING FIELD DIMENSIONS BEFORE ORDERING OR FABRICATING ANY MATERIAL

NOTE:
For "VIEW A-A" and "DETAIL 3", see "FLOOR BEAM CONNECTION DETAILS NO. 1" sheet.

	BY	CHECKED
DESIGN	Muthanna Omran	John E. Peterson
DETAILS	F. Maagma / C. Cancino	John E. Peterson
QUANTITIES	Muthanna Omran	John E. Peterson

STATE OF CALIFORNIA
DEPARTMENT OF TRANSPORTATION

DIVISION OF ENGINEERING SERVICES
STRUCTURE DESIGN
DESIGN BRANCH 8

BRIDGE NO. 28-0153L
POST MILE 25.0/25.4, 0.0/0.6

FLOOR BEAM AND BEARING RETROFIT
BENICIA-MARTINEZ BRIDGE
FLOOR BEAM CONNECTION PIER 8

STRUCTURES DESIGN DETAIL SHEET (ENGLISH) (REV. 09-01-10)

ORIGINAL SCALE IN INCHES FOR REDUCED PLANS 0 1 2 3

UNIT: 3593
PROJECT NUMBER & PHASE: 0412000062-1
CONTRACT NO.: 04-3G4624

DISREGARD PRINTS BEARING EARLIER REVISION DATES

REVISION DATES: 01-06-16 04-27-16 04-28-16

SHEET 5 OF 7

FILE => 28-0153l-r-flrbmconn_p8.dgn

USERNAME => s141070 DATE PLOTTED => 27-JUN-2016 TIME PLOTTED => 08:10

DIST	COUNTY	ROUTE	POST MILES TOTAL PROJECT	SHEET No.	TOTAL SHEETS
04	CC, Sol	680	25.0/25.4, 0.0/0.6	13	14

Muthanna S. Omran 05-02-16
REGISTERED CIVIL ENGINEER DATE

6-24-16
PLANS APPROVAL DATE

REGISTERED PROFESSIONAL ENGINEER MUTHANNA S. OMRAN No. 61637 Exp. 06-30-17 CIVIL STATE OF CALIFORNIA

The State of California or its officers or agents shall not be responsible for the accuracy or completeness of scanned copies of this plan sheet.

NOTE:

S - Equals existing bolt hole spacing to be field verified

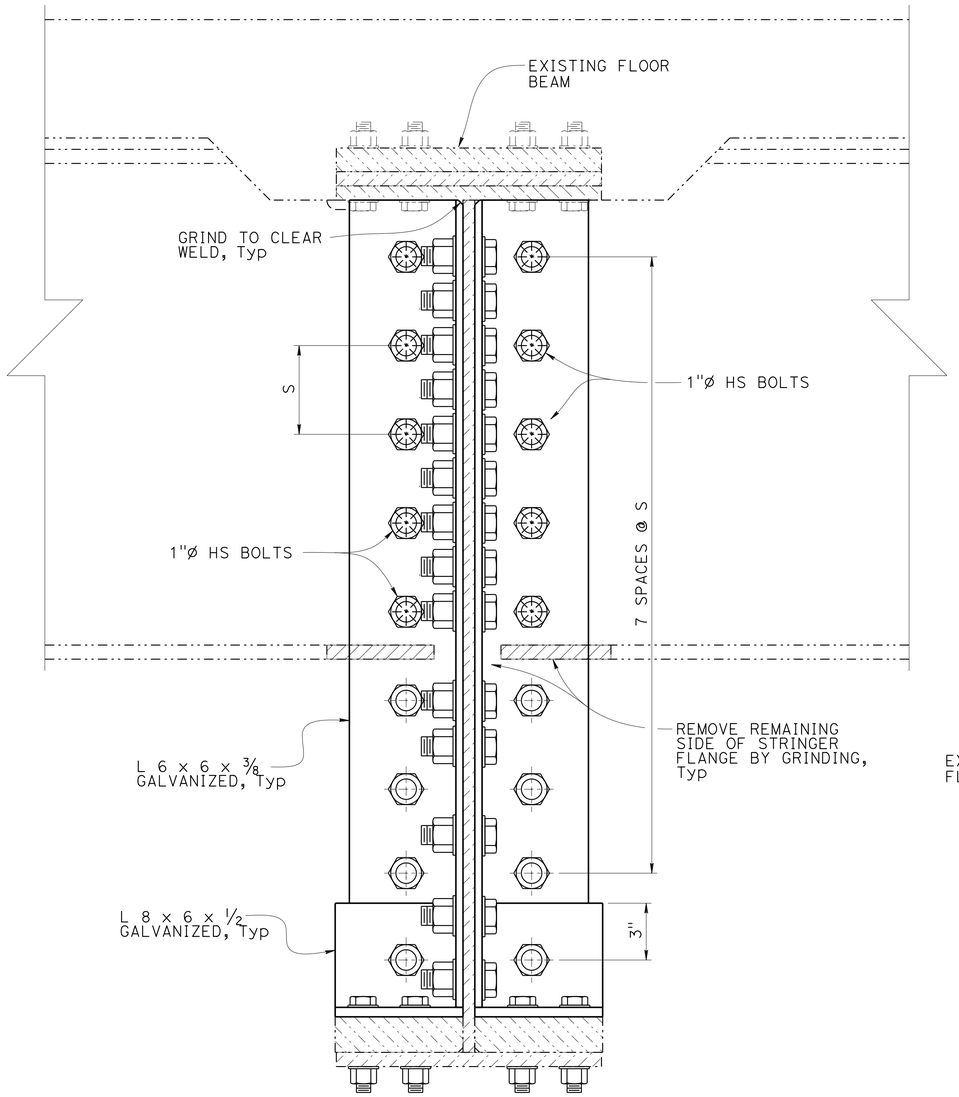

VIEW A-A

3" = 1'-0"

(TRAVELER RAIL AND TEMPORARY SUPPORT NOT SHOWN)

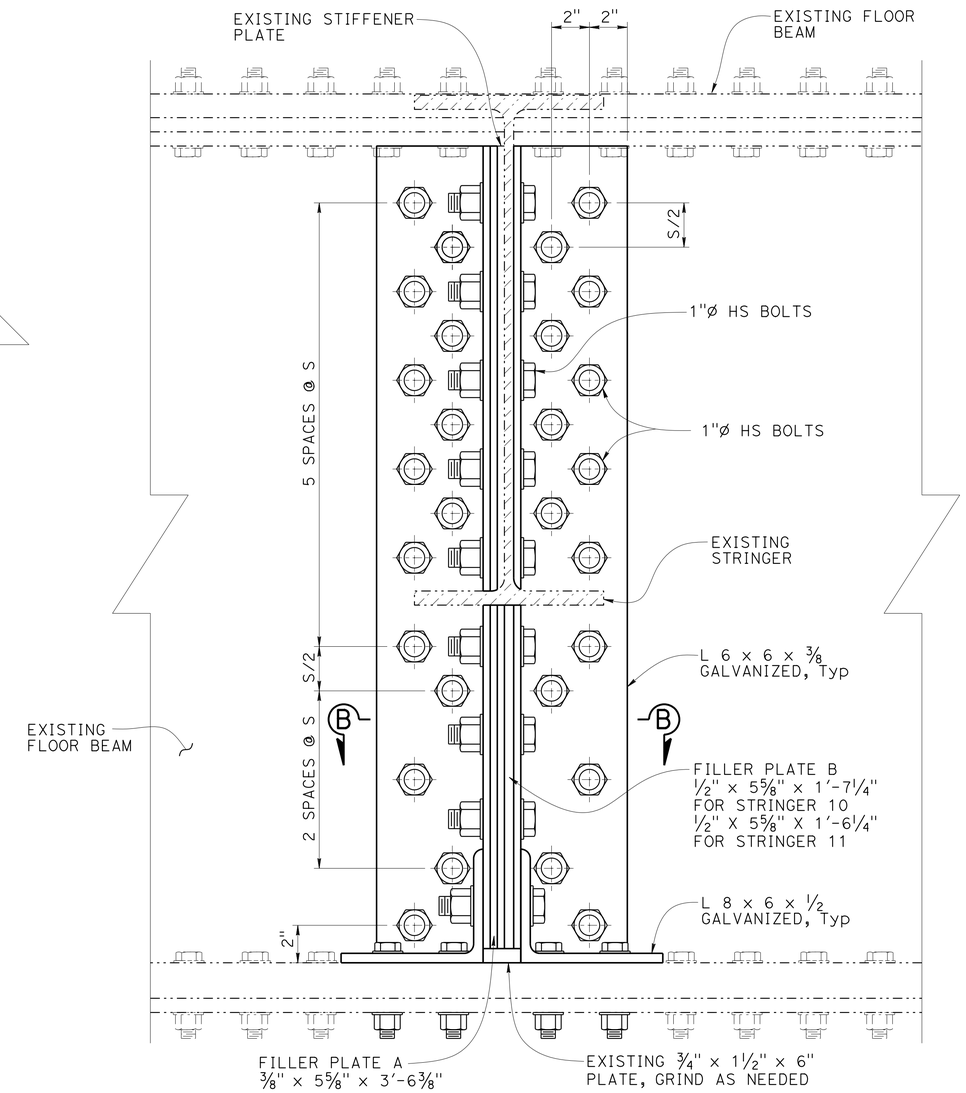

DETAIL 3

3" = 1'-0"

(DECK, TRAVELER RAIL AND TEMPORARY SUPPORT NOT SHOWN)

LEGEND:

- Indicates new Structure
- Indicates existing Structure
- Indicates new bolts in new bolt holes
- Indicates Group X Bolts. New bolts in exist bolt holes

CONSTRUCTION SEQUENCE FOR LOCATION (B)

Perform stringer work in the following sequence:

1. Install containment for paint work.
2. Clean, spot blast clean and paint undercoat existing structural steel.
3. Install temporary supports.
4. Remove existing Group X bolts. Clean, spot blast clean and paint undercoat the areas of structural steel that were covered by the existing bolts. Install new bolt assemblies.
5. Temporary supports may be removed after item 4 is complete.
6. Complete installation of remaining items. Repair damaged galvanization. Repair damaged undercoat.
7. Paint finish coats.

NOTES:

1. For "SECTION B-B", see "FLOOR BEAM CONNECTION DETAILS NO. 2" sheet.
2. For location of "DETAIL 3" and 'VIEW A-A", see "FLOOR BEAM CONNECTION PIER 8" sheet.

NOTE:
THE CONTRACTOR MUST VERIFY ALL CONTROLLING FIELD DIMENSIONS BEFORE ORDERING OR FABRICATING ANY MATERIAL

	BY	CHECKED
DESIGN	Muthanna Omran	John E. Peterson
DETAILS	F. Maagma / C. Cancino	Muthanna Omran
QUANTITIES	Muthanna Omran	John E. Peterson

STATE OF CALIFORNIA
DEPARTMENT OF TRANSPORTATION

DIVISION OF ENGINEERING SERVICES
STRUCTURE DESIGN
DESIGN BRANCH 8

BRIDGE NO. 28-0153L
POST MILE 25.0/25.4, 0.0/0.6

FLOOR BEAM AND BEARING RETROFIT
BENICIA-MARTINEZ BRIDGE
FLOOR BEAM CONNECTION DETAILS NO. 1

STRUCTURES DESIGN DETAIL SHEET (ENGLISH) (REV. 09-01-10)

ORIGINAL SCALE IN INCHES FOR REDUCED PLANS 0 1 2 3

UNIT: 3593
PROJECT NUMBER & PHASE: 0412000062-1
CONTRACT NO.: 04-3G4624

DISREGARD PRINTS BEARING EARLIER REVISION DATES

REVISION DATES: 01-06-16 03-24-16 03-28-16

SHEET 6 OF 7

FILE => 28-0153l-r-flrbmconndt01.dgn

USERNAME => s141070 DATE PLOTTED => 27-JUN-2016 TIME PLOTTED => 08:10

DIST	COUNTY	ROUTE	POST MILES TOTAL PROJECT	SHEET No.	TOTAL SHEETS
04	CC, Sol	680	25.0/25.4, 0.0/0.6	14	14

Muthanna S. Omran 05-02-16
REGISTERED CIVIL ENGINEER DATE

6-24-16
PLANS APPROVAL DATE

REGISTERED PROFESSIONAL ENGINEER
MUTHANNA S. OMRAN
No. 61637
Exp. 06-30-17
CIVIL
STATE OF CALIFORNIA

The State of California or its officers or agents shall not be responsible for the accuracy or completeness of scanned copies of this plan sheet.

LEGEND:

- Indicates new Structure
- Indicates existing Structure
- Indicates existing bolts
- Indicates new bolts in existing bolt holes

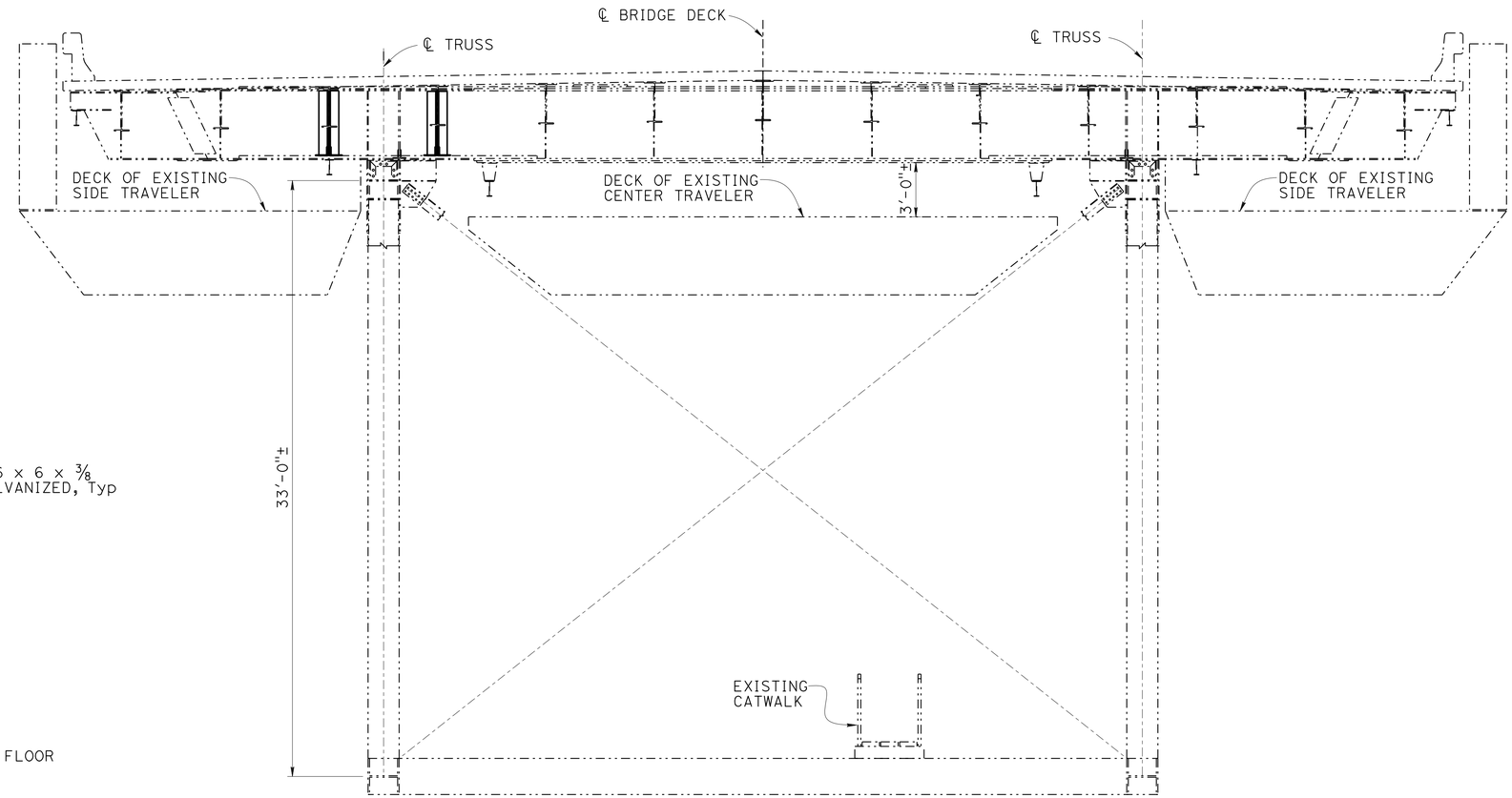

CATWALK LOCATION - TRUSS SPANS

No Scale

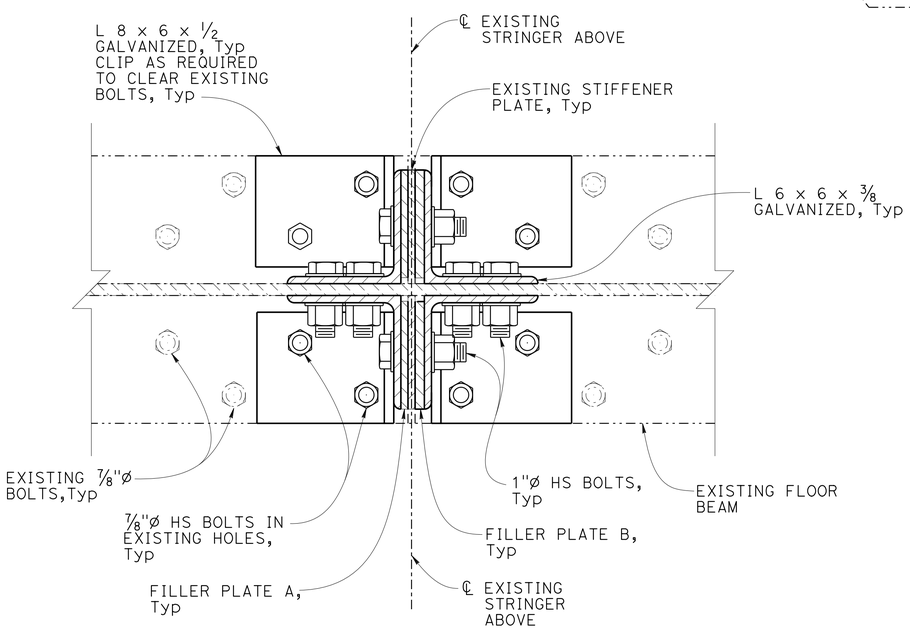

VIEW B-B

3" = 1'-0"

(TRAVELER RAIL NOT SHOWN)

NOTE:
THE CONTRACTOR MUST VERIFY ALL CONTROLLING FIELD DIMENSIONS BEFORE ORDERING OR FABRICATING ANY MATERIAL

	BY	CHECKED
DESIGN	Muthanna Omran	John E. Peterson
DETAILS	F. Maagma / C. Cancino	Muthanna Omran
QUANTITIES	Muthanna Omran	John E. Peterson

STATE OF CALIFORNIA
DEPARTMENT OF TRANSPORTATION

DIVISION OF ENGINEERING SERVICES
STRUCTURE DESIGN
DESIGN BRANCH 8

BRIDGE NO. 28-0153L
POST MILE 25.0/25.4, 0.0/0.6

FLOOR BEAM AND BEARING RETROFIT
BENICIA-MARTINEZ BRIDGE
FLOOR BEAM CONNECTION DETAILS NO. 2

STRUCTURES DESIGN DETAIL SHEET (ENGLISH) (REV. 09-01-10)

ORIGINAL SCALE IN INCHES FOR REDUCED PLANS 0 1 2 3

UNIT: 3593
PROJECT NUMBER & PHASE: 0412000062-1
CONTRACT NO.: 04-3G4624

DISREGARD PRINTS BEARING EARLIER REVISION DATES

REVISION DATES: 01-06-16 03-18-16 03-31-16

SHEET 7 OF 7

FILE => 28-0153l-r-flrbmconndt02.dgn

USERNAME => b141070 DATE PLOTTED => 27-JUN-2016 TIME PLOTTED => 08:10