INFORMATION HANDOUT

For Contract No. 05-1G1504
At 05-SLO-41-19.7/R42.2

Identified by
Project ID 0514000113

MATERIALS INFORMATION

1. Pavement Profile Data

2. Water Source Information

3. Temporary Alternative Crash Cushion System

4. Alternative In-Line Terminal System

5. Alternative Flared Terminal System

6. Pavement Recycling with Intelligent Compaction Survey Control Points

MATERIALS INFORMATION

1. Pavement Profile Data

Summary of Investigations

1. ROADWAY:
Investigations carried out along the existing roadbed between PM 21.7/31.5 and PM 34.5/R42.2 indicate that the existing materials are suitable for cold in-place recycling. Cores were taken every half-mile within the CIR limits of the project. The results indicated that the engineering properties of the existing pavement may be improved enough to extend the life of the existing pavement five years by recycling the upper 0.25’ with asphalt emulsion and capping with 0.15' of HMA (Type A) followed by 0.10' of RHMA-G.

The general structural section, from the bottom up, is native material, and hot mix asphalt. Core samples indicated a depth of Hot Mix Asphalt that ranged from 0.32' to 0.60’

The existing AC has transverse and longitudinal cracking. There is also isolated alligator cracking in some areas.

Any reliance placed by the contractor on this information shall be at their own risk and they shall undertake their own separate testing program to determine the materials present and conditions prevailing at the time of construction.

2. WATER AVAILABILITY:
Approximately 600,000 gallons of water is needed for cold planning pavement operations as well as the compaction of RHMA and HMA. The source of water for this project is available from Al Webster at The Jail Flat Ranch in Creston, CA.

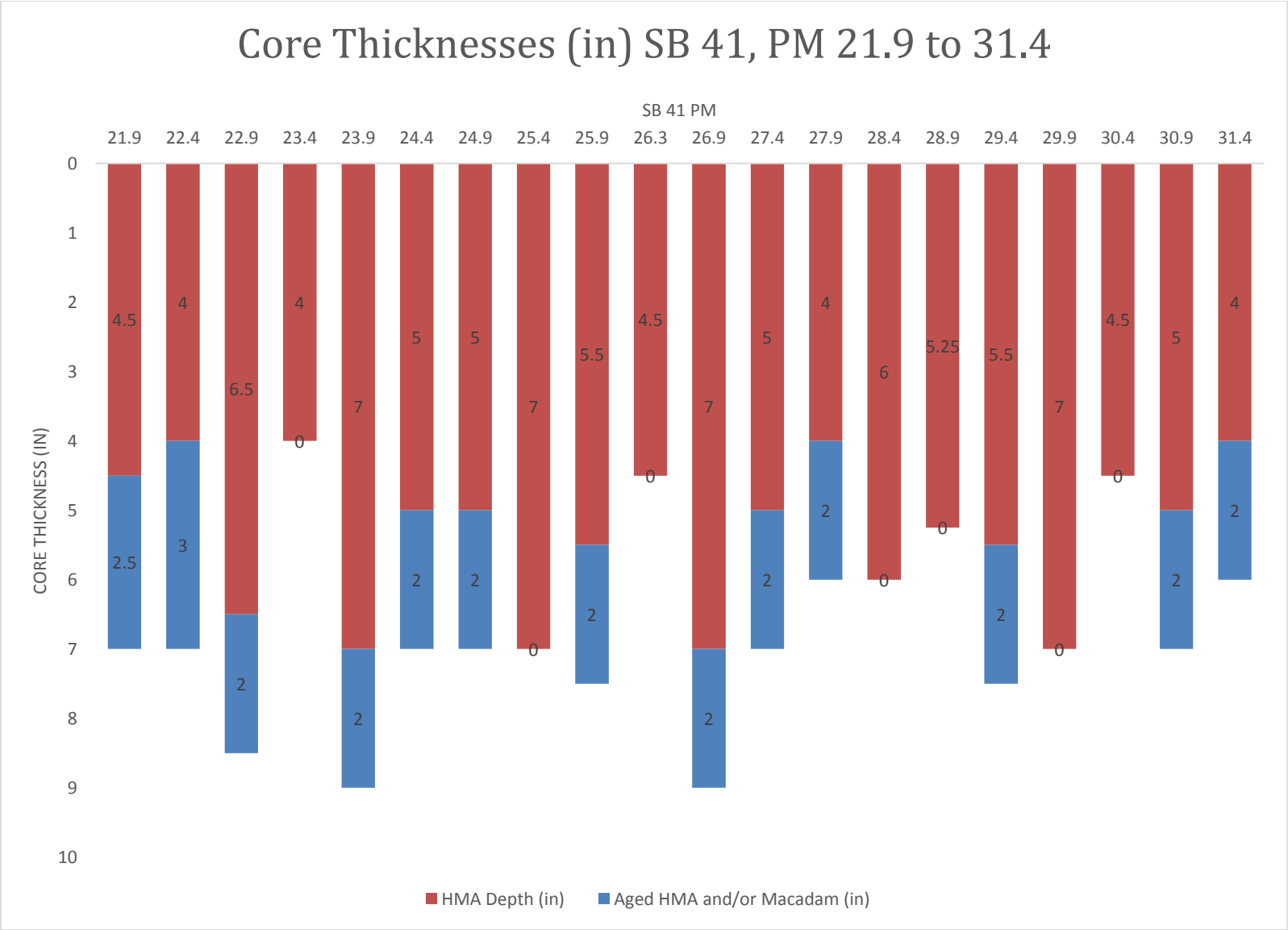
Core Thicknesses (in) SB 41, PM 21.9 to 31.4
SB 41 PM
21.9
22.4
22.9
23.4
23.9
24.4
24.9
25.4
25.9
26.3
26.9
27.4
27.9
28.4
28.9
29.4
29.9
30.4
30.9
31.4
CORE THICKNESS (IN)
0
1
2
3
4
5
6
7
8
9
10
4.5
2.5
4
3
6.5
2
4
0
7
2
5
2
5
2
7
0
5.5
2
4.5
0
7
2
5
2
4
2
6
0
5.25
0
5.5
2
7
0
4.5
0
5
2
4
2
HMA Depth (in)
Aged HMA and/or Macadam (in)

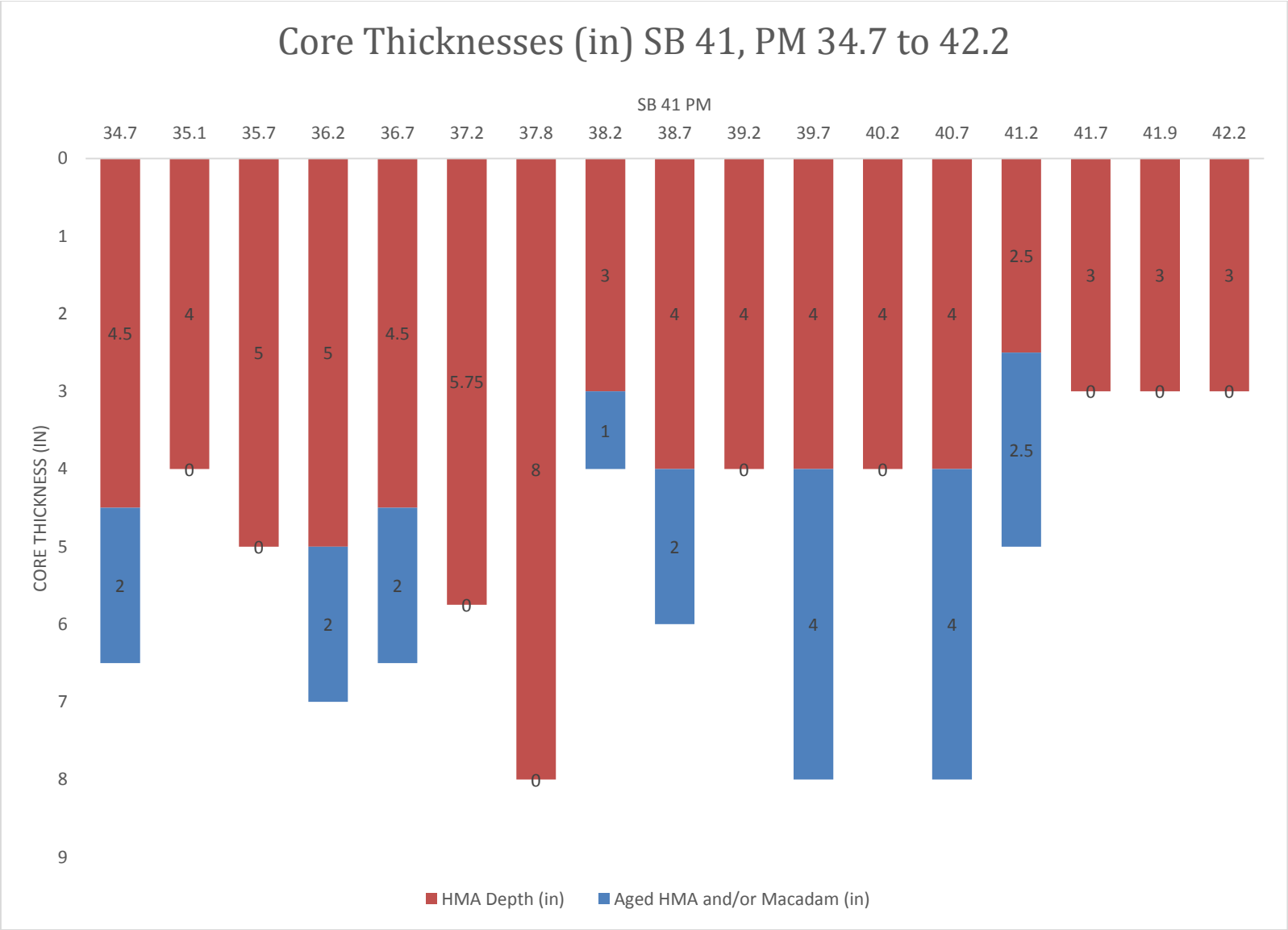
Core Thicknesses (in) SB 41, PM 34.7 to 42.2
SB 41 PM
34.7
35.1
35.7
36.2
36.7
37.2
37.8
38.2
38.7
39.2
39.7
40.2
40.7
41.2
41.7
41.9
42.2
CORE THICKNESS (IN)
0
1
2
3
4
5
6
7
8
9
4.5
2
4
0
5
0
5
2
4.5
2
5.75
0
8
0
3
1
4
2
4
0
4
4
4
0
4
4
2.5
2.5
3
0
3
0
3
0
HMA Depth (in)
Aged HMA and/or Macadam (in)

MATERIALS INFORMATION

2. Water Source Information

February 24, 2016

Mr. Michael Day, PE
Transportation Engineer, Civil
Project Development Design II, Branch R
2015 E. Sheilds Ave. Suite 100
Fresno, CA 93726

Re: Atascadero East CAPM Non-Potable Water
EA 05 – SLO – 41 – PM 19.7/R42.2 EA 1G150

The amount of non-potable water needed is 608,000 gallons.

Per your request, I can confirm that AL Webster / The Jail Flat Ranch in Creston CA can easily and efficiently provide the above mentioned project with the required volume (approximately 608,000 gallons through the duration of the project) of non-potable water. The water source is located at the Jail Flat Ranch 6101 Webster Road Creston CA 93432(approx half a mile from JCT Rte 229/041 post mile 27.97), source irrigation well, hi flow over head fill.

When you are ready for the water and rates, please contact ranch owner, AL Webster at (805)235-7664

If you have any questions regarding the availability of the above said water source, please do not hesitate to call, thank you.

AL Webster 02/29/2016

MATERIALS INFORMATION

3. Temporary Alternative Crash Cushion System

ABSORB 350® | NON-REDIRECTIVE CRASH CUSHION - SACRIFICIAL

- ANCHORLESS INSTALLATION - NO FOUNDATION REQUIRED
- COST EFFECTIVE PROTECTION FROM CONCRETE BARRIER ENDS
- WORLDWIDE PROVEN PERFORMANCE
- NCHRP 350 ACCEPTED

BARRIER SYSTEMS®
BY LINDSAY

ABSORB 350® | NON-REDIRECTIVE CRASH CUSHION - SACRIFICIAL

PHYSICAL SPECIFICATIONS

Classification	NR-S	
TL-3 Length	32′	9.7 m
Width	24″	610 mm
Height	32″	813 mm
Module Weight Empty	110 lb.	50 kg
Test Level	NCHRP 350	TL 1/2/3

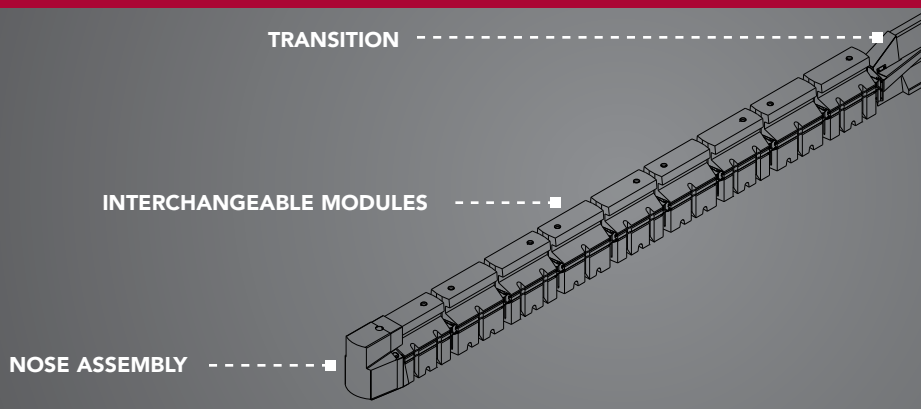

NARROW ANCHORLESS WATER FILLED CRASH CUSHION

No ground anchoring, the largest selection of transitions and modular technology allow the ABSORB 350 System to be used in multiple speed conditions. The ABSORB 350 System is ideal for contractors due to the ease of maintenance after an impact and quick deployment. At 24″ (610 mm) wide, it is ideally suited for narrow areas where road and workspace is limited. The ABSORB 350 System is easy to restore after an impact because the System uses uniform modular components. The use of standardized modular components also helps to reduce inventory costs.

FREQUENTLY ASKED QUESTIONS

Can the nose be angled off the barrier to better face traffic?

Yes, as long as all of the ABSORB 350 modules remain pinned and connected. For larger angles, it is recommended that the last barrier section be moved to face traffic.

Can the ABSORB 350 System be moved while filled with water?

Yes, the System is rigid enough to be repositioned filled with water by sliding the optional wheel / jack assembly under each element.

What transitions are available?

Dozens of transition options are available, including attachments to; Standard NJ / J / K / F, Wide / X-Wide NJ, I-Lock, Smooth Face, JJ Hook, QMB, ArmorGuard®, Orion®, BarrierGuard® and ZoneGuard®.

Can the ABSORB 350 System be used during cold weather?

Since ABSORB 350 modules have no internal steel parts, the use of any approved anti icing chemical is acceptable.

FEATURES

- Rapid deployment and retrieval
- No ground anchoring required
- Low initial price
- Narrow footprint
- Can be deployed on almost any road surface
- Meets NCHRP 350 TL-1, TL-2, TL-3 test criteria
- Easily transitioned to multiple widths and shapes of barriers
- Nose and transition are reusable after most design impacts
- Approved for use in permanent and work zone locations

DISTRIBUTED BY:

LINDSAY™ TRANSPORTATION SOLUTIONS | BARRIER SYSTEMS® BY LINDSAY | RAILROAD PRODUCTS BY LINDSAY | SNOLINE™ BY LINDSAY

Lindsay Transportation Solutions Sales and Services, Inc.
180 River Road • Rio Vista, CA 94571 • +1 707.374.6800 U.S. Toll Free: 888.800.3691 • www.barrriersystemsinc.com

General details for the ABSORB 350 System are subject to change without notice to reflect improvements and upgrades.

Additional information is available from Lindsay Transportation Solutions Sales and Services, Inc. © Lindsay Transportation Solutions, Inc.

PT # ABS04-03252013

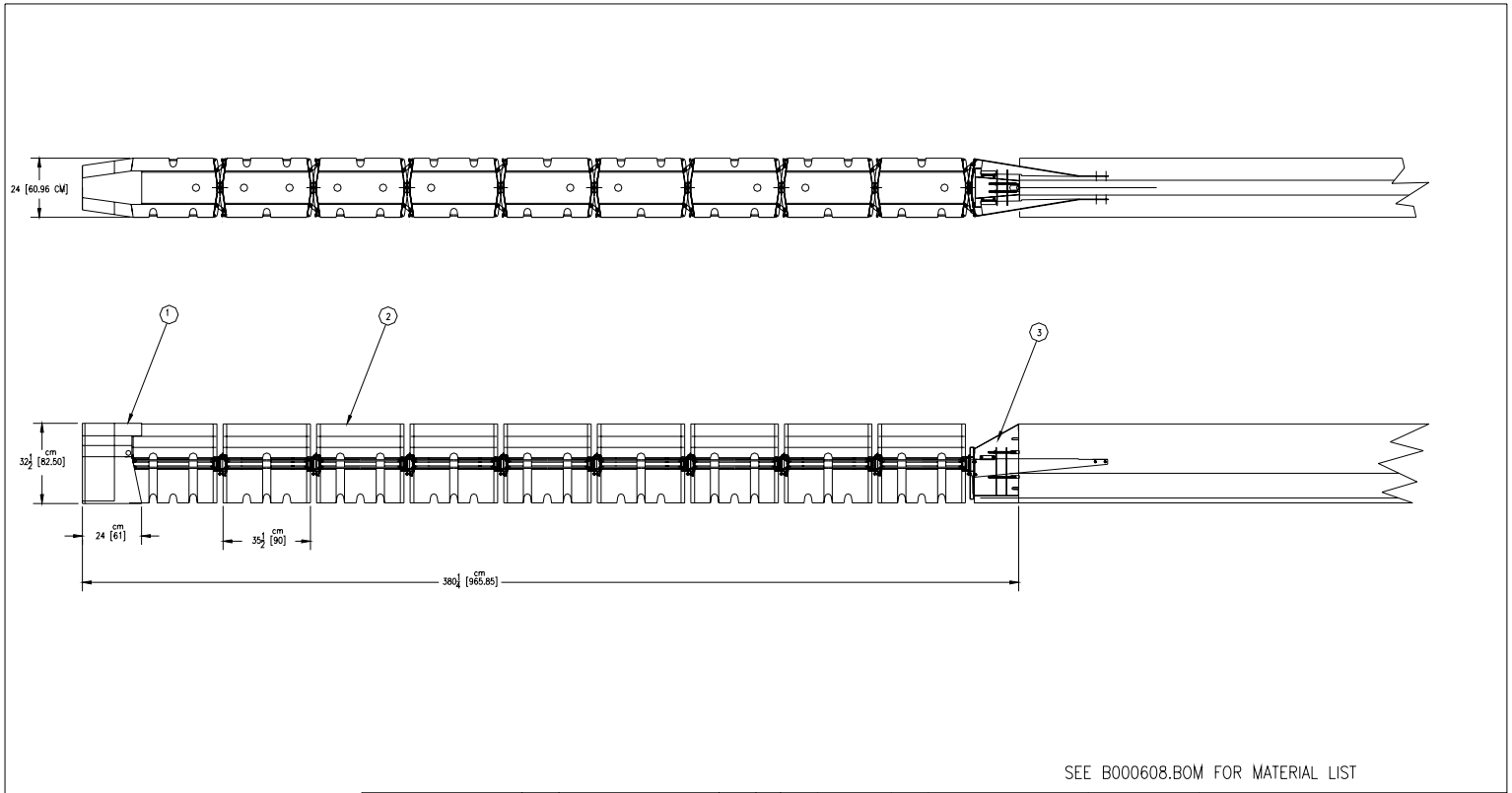

SEE B000608.BOM FOR MATERIAL LIST

NOTE:
THICKNESS OF WELD TO BE EQUAL TO THE THINNER OF 2 PIECES BEING JOINED. WELD TO BE ALL AROUND UNLESS OTHERWISE NOTED.

© 2000 Barrier Systems, Inc.

The information heron is proprietary to Barrier Systems Inc. and shall not be disclosed, duplicated or used otherwise without the express written approval of Barrier Systems Inc.

REV.	CHANGES	DATE	BY	REQ'D	NEXT ASSY.	ITEM

SCALE: 1=40

	DATE	INIT.
DRAWN BY	5/24/00	DGB
APPR'D BY		

Standard Tolerance
Angular ± 1/2°
Fractional ± 1/16
Decimal ± .010

TITLE : ASSEMBLY SYSTEM, ABSORB TL3 P.C.B.

MODEL

DRAWING NUMBER: B000608

REV.

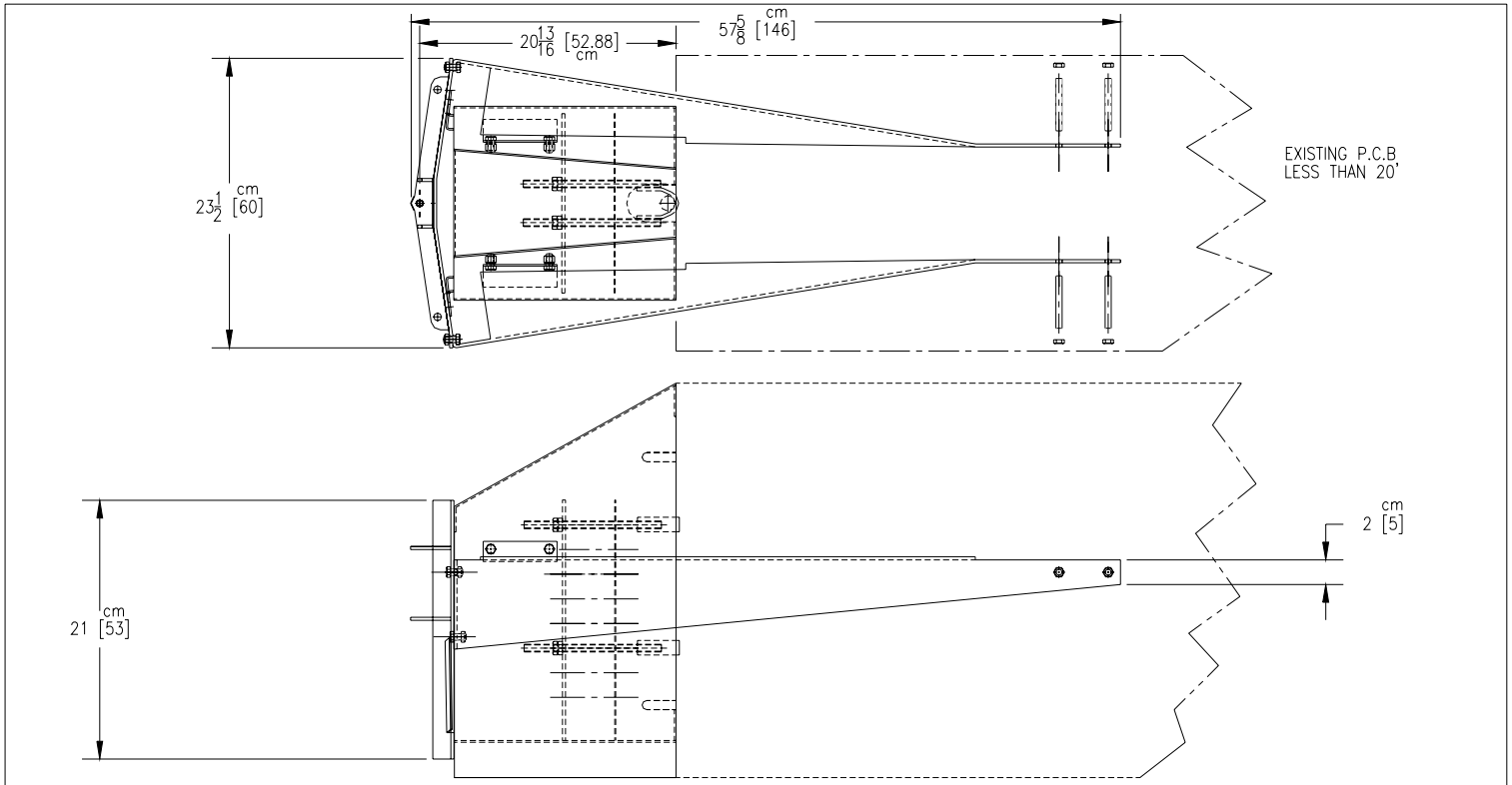

NOTE:
THICKNESS OF WELD TO BE EQUAL TO THE THINNER OF 2 PIECES BEING JOINED. WELD TO BE ALL AROUND UNLESS OTHERWISE NOTED.

© 2000 Barrier Systems, Inc.

The information heron is proprietary to Barrier Systems Inc. and shall not be disclosed, duplicated or used otherwise without the express written approval of Barrier Systems Inc.

REV.	CHANGES	DATE	BY	REQ'D	NEXT ASSY.	ITEM

SCALE: EIGHTH

	DATE	INIT.
DRAWN BY	05/24/00	R.R.C.
APPR'D BY		JM

Standard Tolerance
Angular ± 1/2°
Fractional ± 1/16
Decimal ± .010

TITLE : TRANSITION HARDWARE
ABSORB 350 TL2
P.C.B.

MODEL	DRAWING NUMBER	REV.
	B000531	

TrafFix Devices Inc.

SLED™

Sentry Longitudinal Energy Dissipater

PRODUCT BULLETIN

SLED™ TL-3 in use on a Missouri Highway

SLED™ TL-2 in Illinois

SLED™ TL-3 in Downtown Cincinnati, Ohio

- FHWA Accepted for Shielding the Blunt End of Concrete, Steel and Water Filled Barriers
- Quick and Easy Set-Up, No Foundation Anchoring, Minimized Installation Exposure Time
- Cost Effective End Treatment for Concrete, Steel or Water Filled Barriers
- Universal Transition Quickly and Easily Attaches to a Variety of Barrier Shapes and Sizes
- *SLED's* Stout Design Virtually Eliminates Vaulting
- Narrow Footprint is Ideal for Work Zones or Roads with Minimal Shoulder Spacing
- Shortest Length TL-3 Water Filled Crash Cushion, Fewer Incidental Impacts
- Containment Impact *SLED* Minimizes Debris Field
- Visual "Drive By" Fill Indicators Quickly Verify Water Module's are Properly Filled
- FHWA Accepted for Use in Uni- and Bi- Directional Applications
- Internal Steel Cables Help Envelop Vehicle After an Impact, Creating a Truly "Limited Gating" System

Scan for Instant QR Video

www.traffixdevices.com

SLED™

Sentry Longitudinal Energy Dissipater

Inline TL-3 Truck Test Pre Impact

Inline TL-3 Truck Test Post Impact

SLED™ Sentry Longitudinal Energy Dissipater

The Sentry Longitudinal Energy Dissipater (SLED) is a narrow, non-redirective gating crash cushion. SLED is designed to shield the end of all permanent and temporary portable barrier shapes including concrete, steel and plastic. SLED's unique design incorporates four internal steel cables which help envelop the impacting vehicle, reducing the possibility of secondary accidents. The SLED End Treatment does not require foundation anchor bolts to be attached to the road or bridge deck. The complete crash cushion can be installed quickly, with as little as one pick up truck and two workers on compacted dirt, gravel, decomposed granite, asphalt or concrete.

Each SLED module is manufactured from a high visibility yellow polyethylene that is UV stabilized to minimize degradation. It is designed to deform and rupture on impact, absorbing the energy of the errant vehicle. SLED has the most versatile transition for shielding all permanent and temporary portable barriers. The combination of hinging and contouring, allows the transition panels of the SLED End Treatment to be attached to narrow, wide or other profile shapes with either converging, or diverging angles, up to 10 degrees.

SLED™ TL-3 4500 lb. Pick-Up Truck Impact Attached to Concrete Median Barrier Wall

TL-3 SPECIFICATIONS	
Length:	25' 3"
Width:	22'-1/2"
Height:	42"
Weight (Empty):	995 lb.
Weight (Full):	6505 lb.

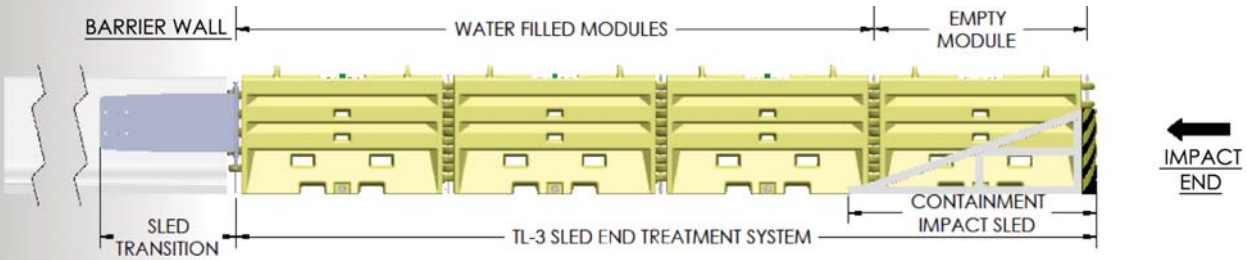

Steel Barrier Attachment

SLED™ TL-3 Transports in a Pick-Up Truck

Concrete Barrier Attachment

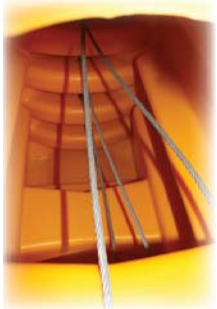

SLED™ Internal Cables

Distributed by:

TrafFix Devices Inc.

160 Avenida La Pata, San Clemente, CA 92673
(949) 361-5663 FAX (949) 361-9205
www.traffixdevices.com

SLED End Treatment System Installation

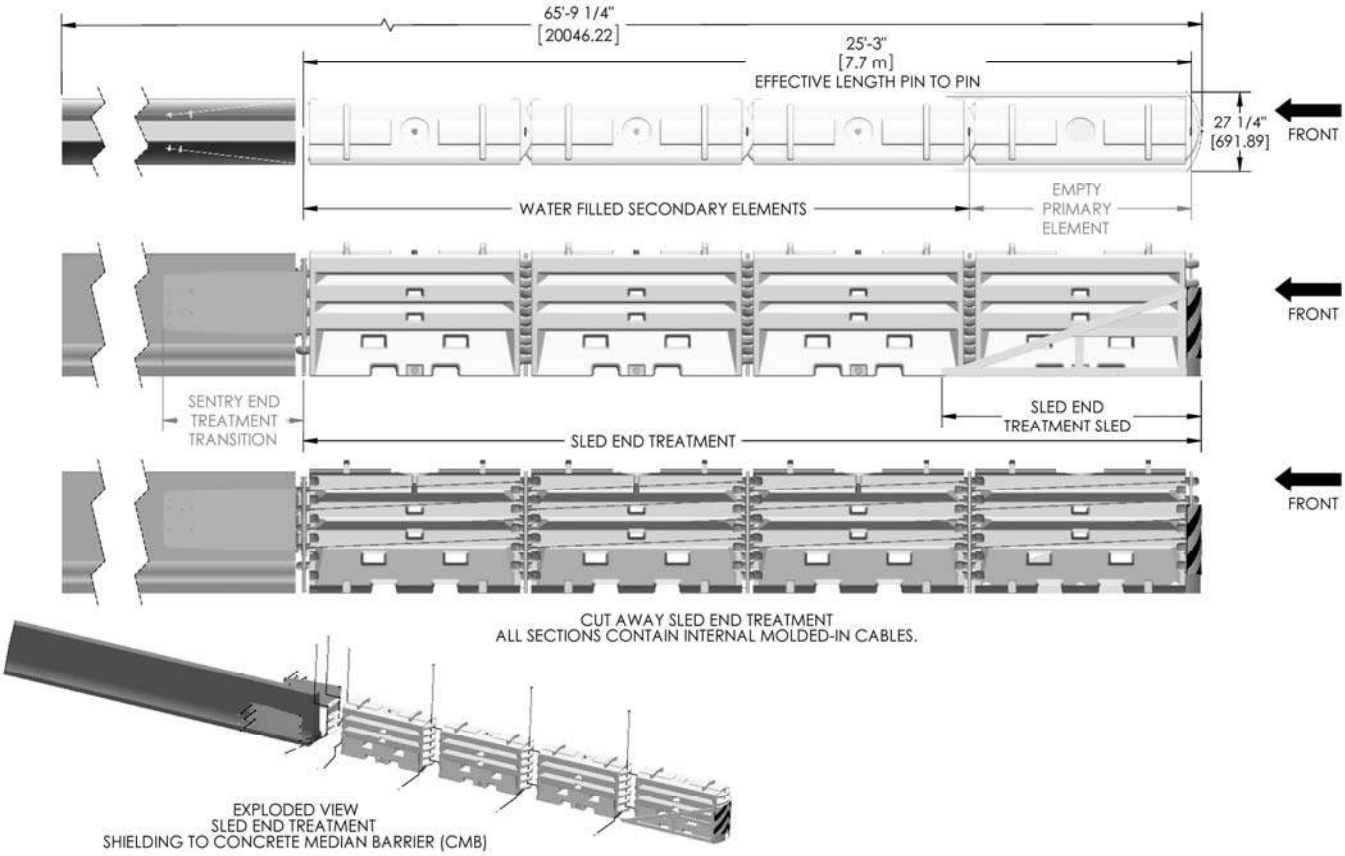

Figure 18: General specifications of installed TL-3 SLED End Treatment system with Transition (or on pg. 51).

Installation procedure to begin on next page

ACZ-350™

PORTABLE TL-2 & TL-3 END TREATMENT

OVERVIEW

The ACZ-350 System combines ease of use and NCHRP 350, gating, non-redirective TL-2 and TL-3 crash cushion performance for work zone protection. This partially reuseable crash cushion can be easily transported, and installed with No Roadway Anchors.

SUPERIOR IMPACT PERFORMANCE

The unique design of the ACZ-350 systems protects errant drivers from impacting concrete barrier ends, and also contains the errant vehicle from vaulting into the workzone.

FEATURES AND BENEFITS

- No Vaulting
- Safely contains errant vehicle
- Accommodates impacts up to 2,000 kg, (4,500 lbs) traveling at speeds up to 100 km/h (62 mph)
- Simple and Fast Installation
- Protects Permanent or Temporary, Steel or Concrete Barrier
- Ideal for Work Zones
- No Foundation or Anchoring

EASY CLEAN-UP
NARROW PROFILE
MINIMUM INTRUSION
LOW COST/ AFFORDABLE
QUICK/EASY TO MOVE

NON-REDIRECTIVE, GATING CRASH CUSHION SYSTEM

All Crash Cushions defined as Non-redirective and Gating require a clear zone. Clear Zones are areas behind the crash cushion that NO workers, machinery, obstructions or other debris could interfere with an errant vehicle. This area should also remain relatively flat. If there are any questions or concerns, please contact your local Energy Absorption Systems, Inc. representative.

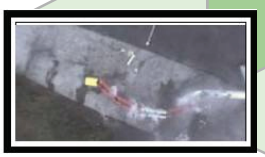

ACZ-350™

ENERGY ABSORPTION SYSTEMS, INC.

SAVING LIVES BY DESIGN®

www.energyabsorption.com

ACZ-350™

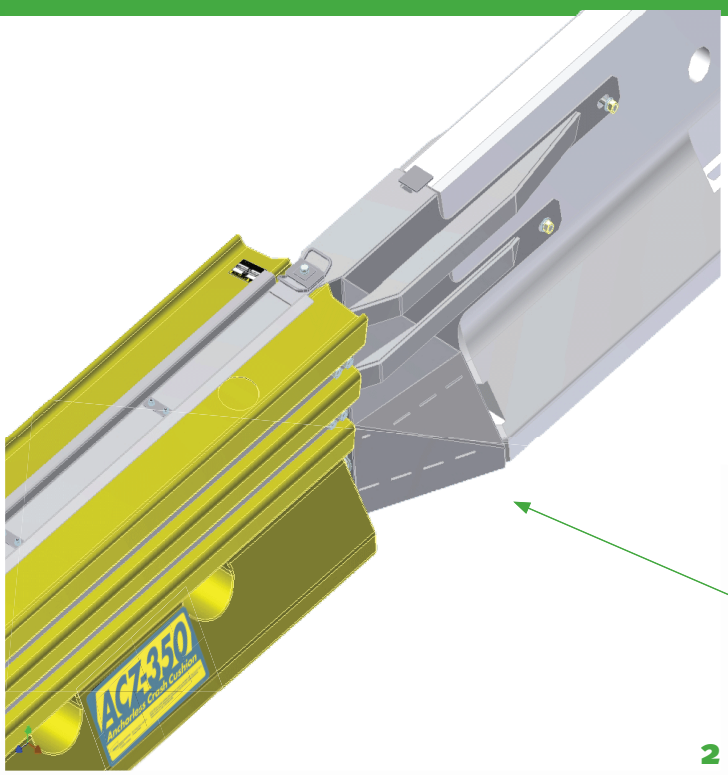

EASY DEPLOYMENT AND REMOVAL

The ACZ-350 System can be easily unloaded and positioned without cranes or heavy equipment. Deployment involves three simple steps:

1. Unload
2. Position and pin barrier sections.
3. Fill Segments with water

SPECIFICATIONS	TL-3
Length	31'-7" (9.6 m)
Width	1'-10" (.6m)
Height	2' 9" (.8m)
Weight (empty)	1350 lbs
Weight (full)	6160 lbs

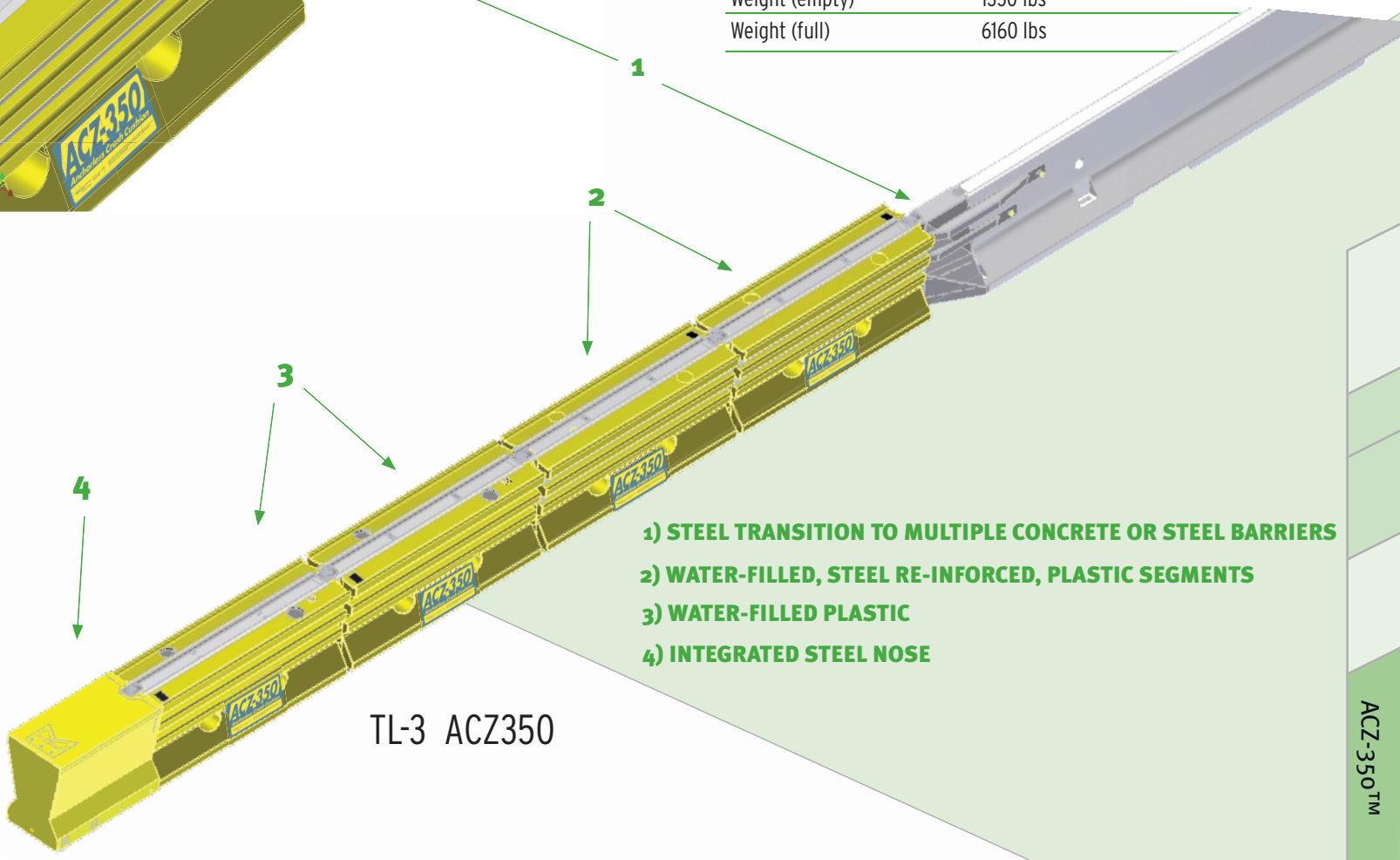

1) STEEL TRANSITION TO MULTIPLE CONCRETE OR STEEL BARRIERS

2) WATER-FILLED, STEEL RE-INFORCED, PLASTIC SEGMENTS

3) WATER-FILLED PLASTIC

4) INTEGRATED STEEL NOSE

TL-3 ACZ350

DISTRIBUTED BY:

Quixote Transportation Safety

35 East Wacker Drive • Chicago, IL 60601
Tel: (312) 467-6750 • Fax: (312) 467-9625
www.energyabsorption.com

ENERGY ABSORPTION SYSTEMS, INC.

www.quixtrans.com

PARTS LIST			
ITEM	STOCK NO.	DESCRIPTION	QTY.
1		ACZ-350 SECTION 2	1
2		ACZ-350 TRANSITION ASSY	1
3		ACZ-350 SECTION 1	1
4		ACZ-350 NOSE ASSY	1

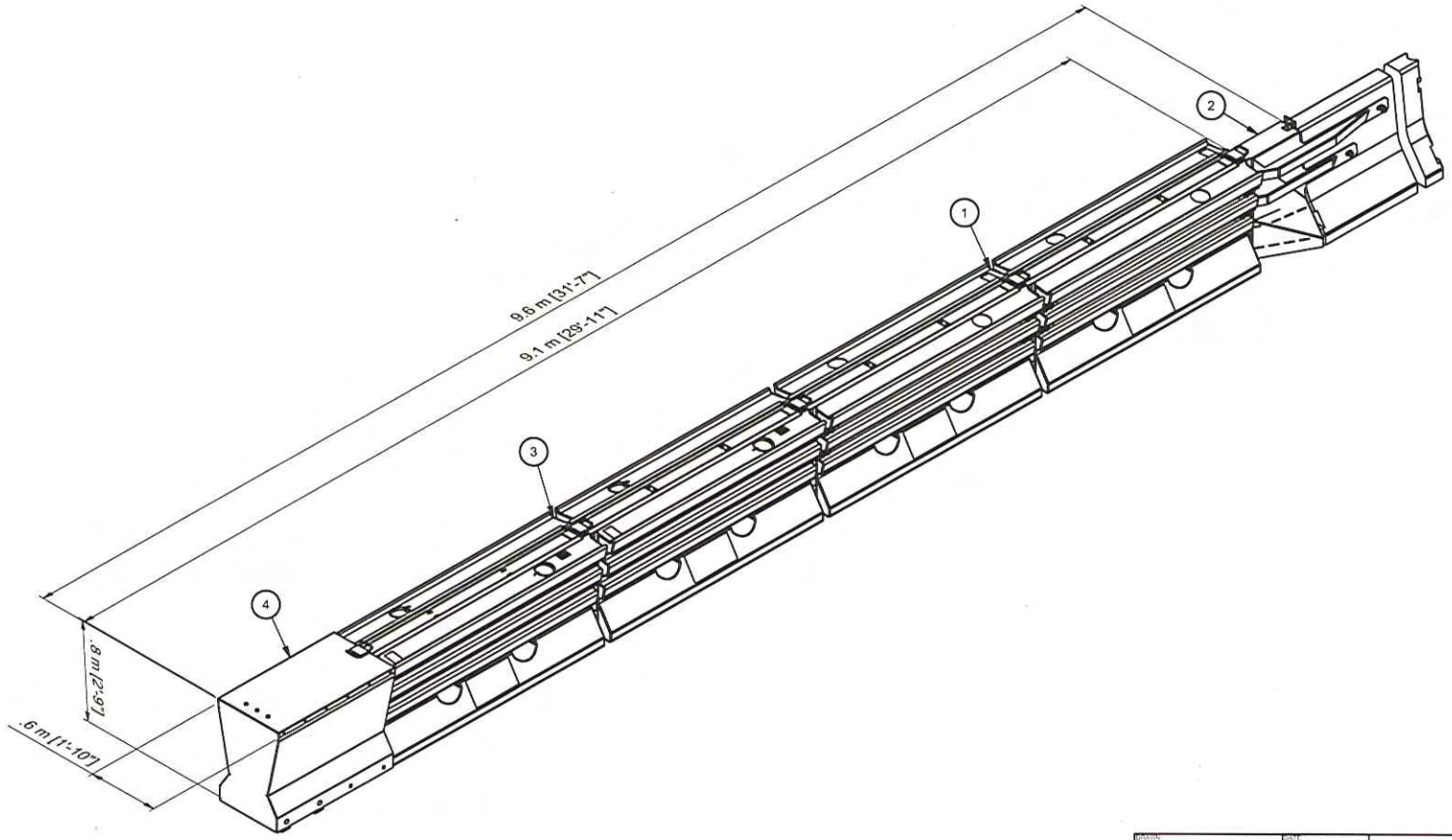

DRAWN aaron.cox	DATE 11/12/2008	ENERGY ABSORPTION SYSTEMS, INC. ENGINEERING AND RESEARCH DEPARTMENT
DESIGNED aaron.cox	DATE	ACZ-350 TL-3 CRASH CUSHION
CHECKED	DATE	
APPROVED	DATE	
Q.C.	DATE	
UNLESS OTHERWISE NOTED ALL DIMENSIONS ARE IN INCHES DIMENSIONS ACCORDING TO ASME Y14.5M-1994 UNLESS OTHERWISE SPECIFIED		DRAWING / SHEET 1 of 1 / REV

Figure 1

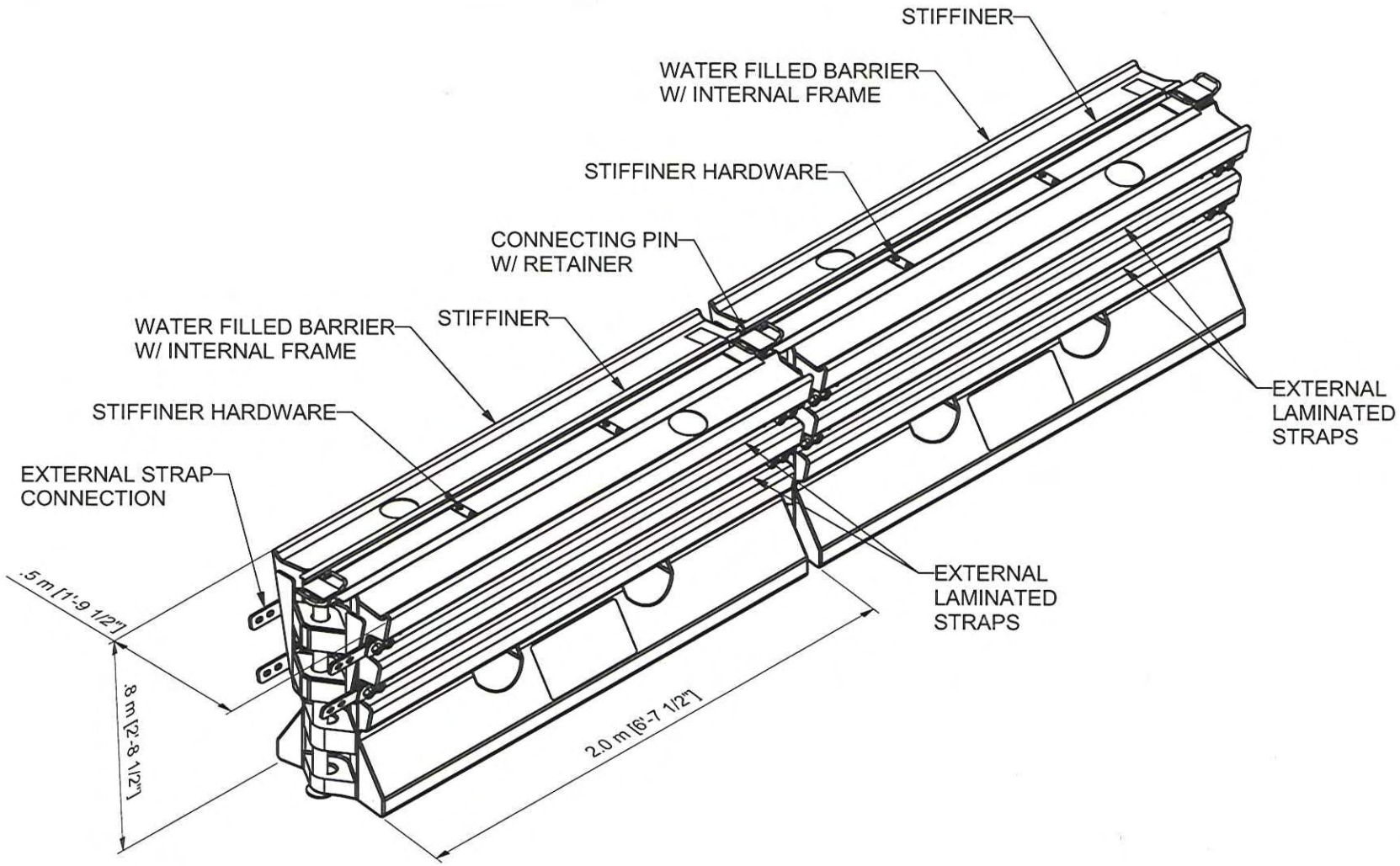

DRAWN: aaron.cox	DATE: 11/13/2008	ENERGY ABSORPTION SYSTEMS, INC. ENGINEERING AND RESEARCH DEPARTMENT
DESIGNED: aaron.cox	DATE:	
CHECKED:	DATE:	ACZ-350 SECTION 2
APPROVED:	DATE:	
Q.C.	DATE:	
UNLESS OTHERWISE NOTED, ALL DIMENSIONS ARE IN INCHES. DIMENSIONS ACCORDING TO ASME Y14.5M-1994 UNLESS OTHERWISE SPECIFIED.	DRAWING:	SHEET: 1 of 1 / REV

Figure 4

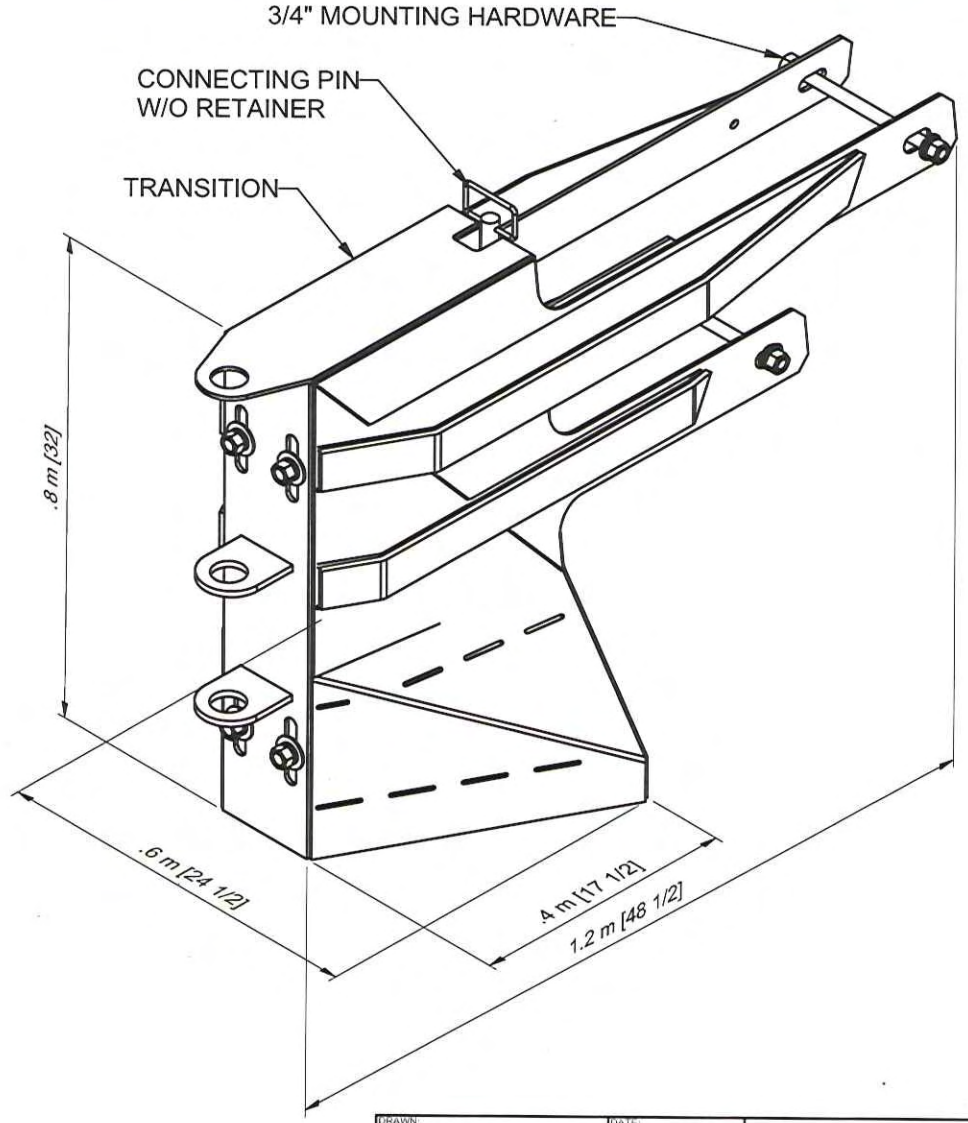

DRAWN: aaron.cox	DATE: 11/13/2008	ENERGY ABSORPTION SYSTEMS, INC. ENGINEERING AND RESEARCH DEPARTMENT
DESIGNED: aaron.cox	DATE:	
CHECKED:	DATE:	ACZ-350 TRANSITION ASSY
APPROVED:	DATE:	
Q.C.	DATE:	
UNLESS OTHERWISE NOTED, ALL DIMENSIONS ARE IN INCHES. DIMENSIONS ACCORDING TO ASME Y14.5M-1994 UNLESS OTHERWISE SPECIFIED.	DRAWING:	SHEET: 1 of 1 / REV

Figure 3

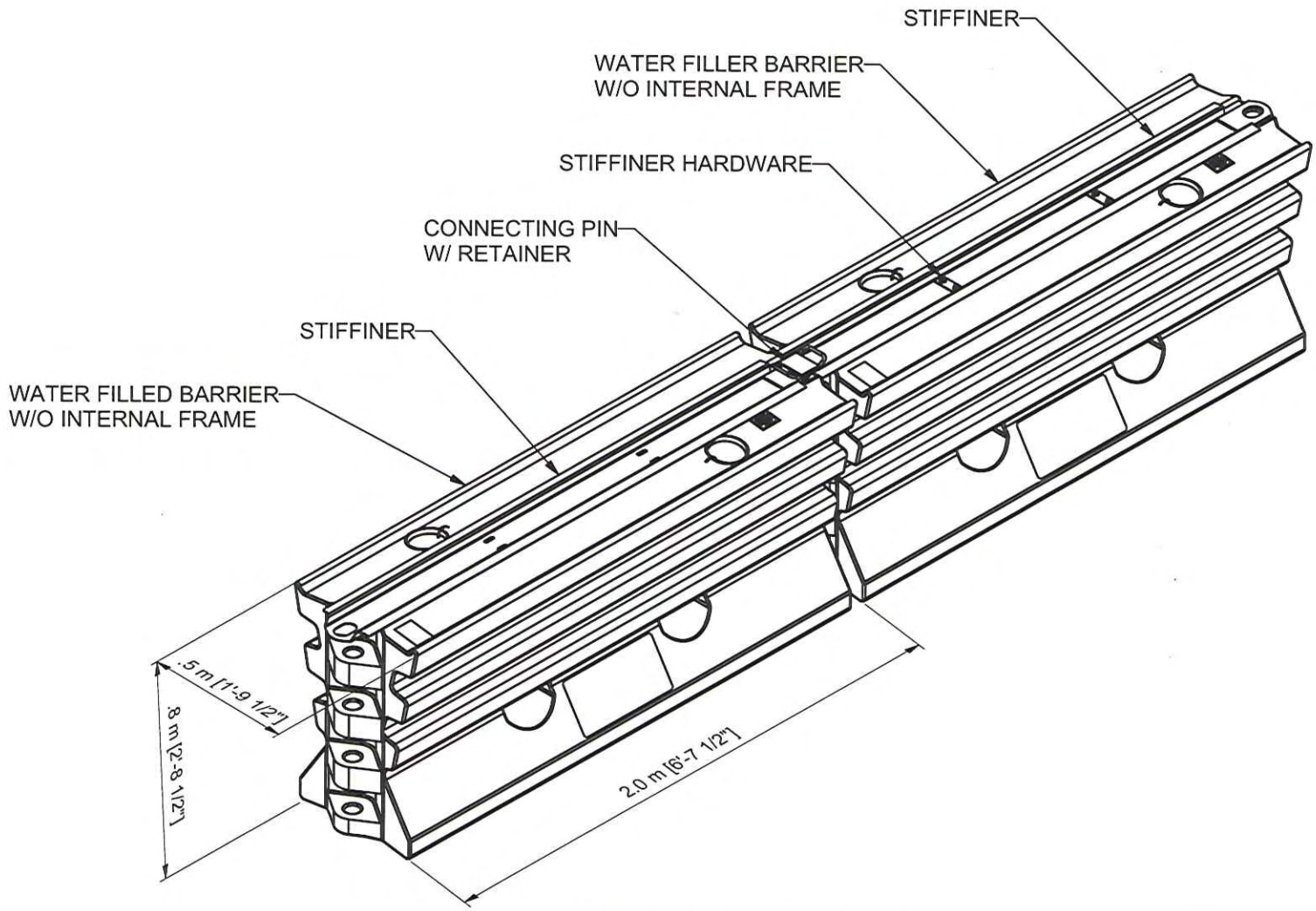

DRAWN: aaron.cox	DATE: 11/12/2008	ENERGY ABSORPTION SYSTEMS, INC. ENGINEERING AND RESEARCH DEPARTMENT
DESIGNED: aaron.cox	DATE:	
CHECKED:	DATE:	ACZ-350 SECTION 1
APPROVED:	DATE:	
Q.C.	DATE:	
UNLESS OTHERWISE NOTED, ALL DIMENSIONS ARE IN INCHES. DIMENSIONS ACCORDING TO ASME Y14.5M-1994 UNLESS OTHERWISE SPECIFIED.		DRAWING: / SHEET: 1 of 1 / REV

Figure 2

MATERIALS INFORMATION

4. Alternative In-Line Terminal System

Assembly Instructions for

SKT-SP Tangent Terminal

&

FLEAT-SP Flared Terminal

SP – Standard Post System Guardrail Terminals

ROAD SYSTEMS, INC.

P. O. Box 2163
Big Spring, Texas 79721
Phone: (432) 263-2435 FAX: (432) 267-4039

Technical Support & Marketing Phone: (330) 346-0721
Technical Support & Marketing Fax: (330) 346-0722

All RSI Installation Manuals can be downloaded from RSI web site
www.roadsystems.com

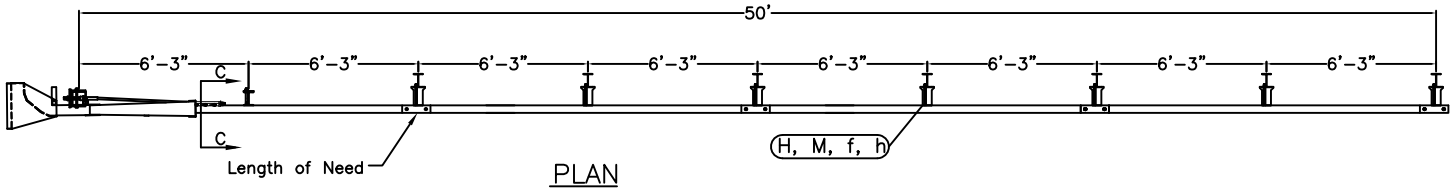

PLAN

TRAFFIC

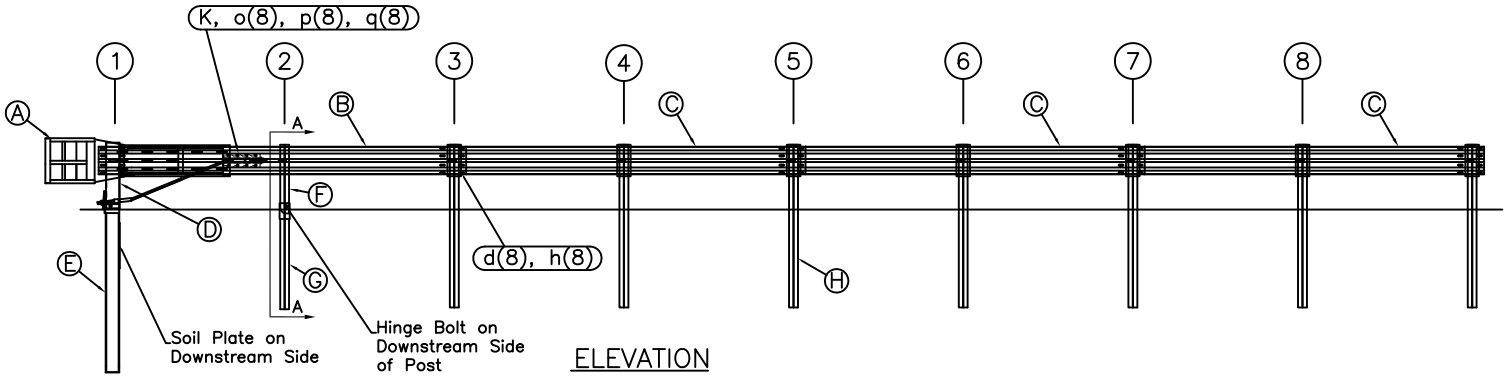

ELEVATION

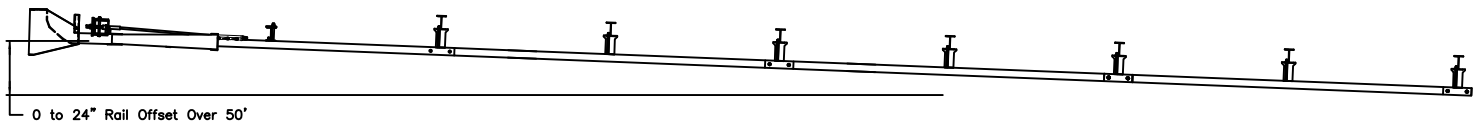

OPTIONAL FLARED INSTALLATION

25:1 maximum flare rate

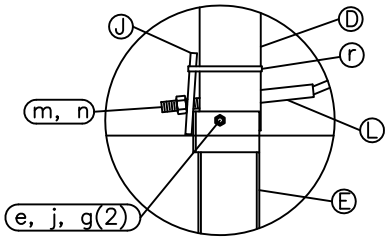

Post #1 Connection Detail

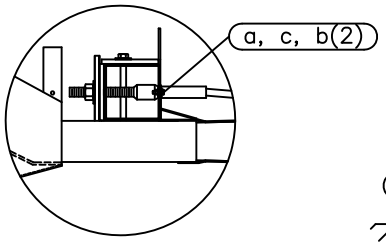

Impact Head Connection Detail

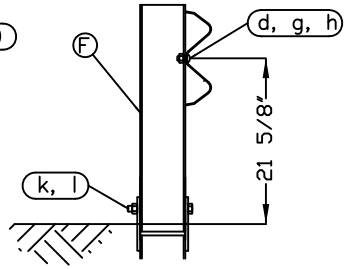

SECTION A–A

Post #2

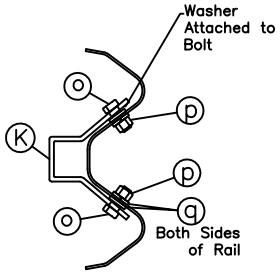

SECTION C–C

Anchor Bracket

ITEM	QTY	BILL OF MATERIALS	ITEM NO.
A	1	SKT IMPACT HEAD	S3000
B	1	SKT ANCHOR RAIL 12'–6"	SF1303
C	3	W–BEAM GUARDRAIL 12'–6"	G1203
D	1	FIRST POST TOP (6X6X⅛" Tube)	TPHP1A
E	1	FIRST POST BOTTOM (6' W6X15)	TPHP1B
F	1	UNIVERSAL HINGE POST #2 UPPER	UHP2A
G	1	HINGED POST LOWER	HP–B
H	6	STEEL LINE POST (6' W6x9)	P621
J	1	BEARING PLATE	E750
K	1	CABLE ANCHOR BOX	S760
L	1	BCT CABLE ANCHOR ASSEMBLY	E770
M	6	RECYCLED PLASTIC BLOCK OR EQUIV.	CBSP–14

HARDWARE (ALL DIMENSIONS IN INCHES)

a	2	5/16 x 1 HEX BOLT GRD 5	B5160104A
b	4	5/16 WASHER	W0516
c	2	5/16 HEX NUT	N0516
d	25	5/8 x 1 1/4 SPLICE BOLT	B580122
e	1	5/8 x 9 HEX BOLT GRD 5	B580904A
f	6	5/8 x 10 H.G.R. BOLT	B581002
g	3	5/8 WASHER	W050
h	31	5/8 H.G.R NUT	N050
j	1	5/8 NUT	N055
k	1	3/4 x 8 1/2 HEX BOLT GRD A449	B340854A
l	1	3/4 HEX NUT	N030
m	2	1" ANCHOR CABLE HEX NUT	N100
n	2	1" ANCHOR CABLE WASHER	W100
o	8	1/2 RSI SHOULDER BOLT W/WASHER	SB12A
p	8	1/2 STRUCTURAL NUT	N012A
q	8	1/2 STRUCTURAL WASHER	W012A
r	1	BEARING PLATE RETAINER TIE	CT–100ST

GENERAL NOTES:

1. All bolts, nuts, cable assemblies, cable anchors and bearing plates shall be galvanized.
2. The lower sections of the Posts 1&2 shall not protrude more than 4 in above the ground (measured along a 5' cord). Site grading may be necessary to meet this requirement.
3. The lower sections of the hinged posts should not be driven with the upper post attached. If the post is placed in a drilled hole, the backfill material must be satisfactorily compacted to prevent settlement.
4. When competent rock is encountered, a 12" Ø post hole, 20 in. deep cored into the rock surface may be used if approved by the engineer for post
1. Granular material will be placed in the bottom of the hole, approximately 2.5" deep to provide drainage. The first post can be field cut to length, placed in the hole and backfilled with suitable backfill. The soil plate may be trimmed if required.
5. A site evaluation should be considered if there is less than 25' between the outlet side of the terminal and any adjacent driving lane.
6. The breakaway cable assembly must be taut. A locking device (vice grips or channel lock pliers) should be used to prevent the cable from twisting when tightening nuts.

RSI
Road Systems, Inc.
Big Spring, TX
Phone: 432-263-2435
or Phone: 330-346-0721

SKT-SP Terminal
TL-3 Standard Post System

2 Post System

Sheet:	1
Date:	11/29/12
By:	JRR
Drawing Name:	SKT-SP-50
Scale:	None
Rev:	0

X-LITE® | REDIRECTIVE, GATING GUARDRAIL TERMINAL

- LOW COST HAZARD PROTECTION
- AVAILABLE AS A TANGENT OR FLARED SYSTEM
- SIMPLE INSTALLATION
- NCHRP 350 TL-3 ACCEPTED

BARRIER SYSTEMS®
BY LINDSAY

X-LITE® | REDIRECTIVE, GATING END TERMINAL

PHYSICAL SPECIFICATIONS

Classification	R-G	
Length	37′ 6″	11.43 m
Width	Tangent or Flared	
Height	27 ⅝″or 31″	710 or 790 mm
Straight / Variable Flare	4′	1.2 m
Test Level	NCHRP 350	TL-3

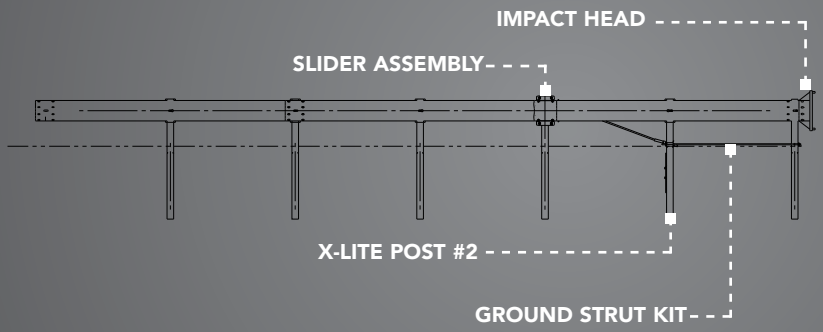

CRASHWORTHY, AFFORDABLE NCHRP 350 TL-3 END TERMINAL

The Redirective, Gating, NCHRP 350 TL-3 X-LITE Guardrail End Terminal features excellent impact performance at an affordable price. Utilizing a superior telescoping, non-extruding design, the X-LITE Guardrail End Terminal provides the life saving performance of a redirective, gating terminal without the high cost. The X-LITE Terminal has been engineered to allow maximum interchangeably for flared and tangent roadside applications. This results in significant savings in inventory and maintenance costs. In addition, The X-LITE Terminal has been designed using many standard, non-proprietary guardrail components. The Terminal is available with I-Beam steel posts using wood or composite blockouts.

FREQUENTLY ASKED QUESTIONS

What makes the X-LITE Terminal different from the other redirective, gating terminals on the market?

The X-LITE Terminal utilizes a telescoping, non-extruding design to provide safe and consistant performance. The X-LITE Terminal is also engineered with maximum interchangeability between flared and tangent roadside applications. Lastly, The X-LITE Terminal is engineered using simple design and standard guardrail components that can be procured in kit or system form.

Can the X-LITE Terminal be attached to concrete barrier?

Yes, The X-LITE Terminal can be attached to concrete barrier with the addition of standard transitions.

Can the X-LITE Terminal be installed using composite blockouts?

Yes, The X-LITE Terminal can be installed using either wood or composite blockouts.

FEATURES

- Utilizes a non-extruding, fixed impact head design
- Uses similar components for tangent and flared systems
- W-Beam telescopes during impact
- 27 ⅝″ or 31″ (710 mm or 790 mm) height option
- Easy to install
- Designed using many standard non-proprietary W-Beam guardrail components
- BLON begins at post 3

WHERE TO USE

Side of road where a recommended clear zone and recoverable slope is attainable.

DISTRIBUTED BY:

Lindsay Transportation Solutions Sales and Services, Inc.
180 River Road • Rio Vista, CA 94571 • +1 707.374.6800 U.S. Toll Free: 888.800.3691 • www.barrriersystemsinc.com

General details for the X-LITE System are subject to change without notice to reflect improvements and upgrades.
Additional information is available from Lindsay Transportation Solutions Sales and Services, Inc. © Lindsay Transportation Solutions, Inc.

PT # XL04-03252013

Appendix A - System Configuration, 37’ 6”

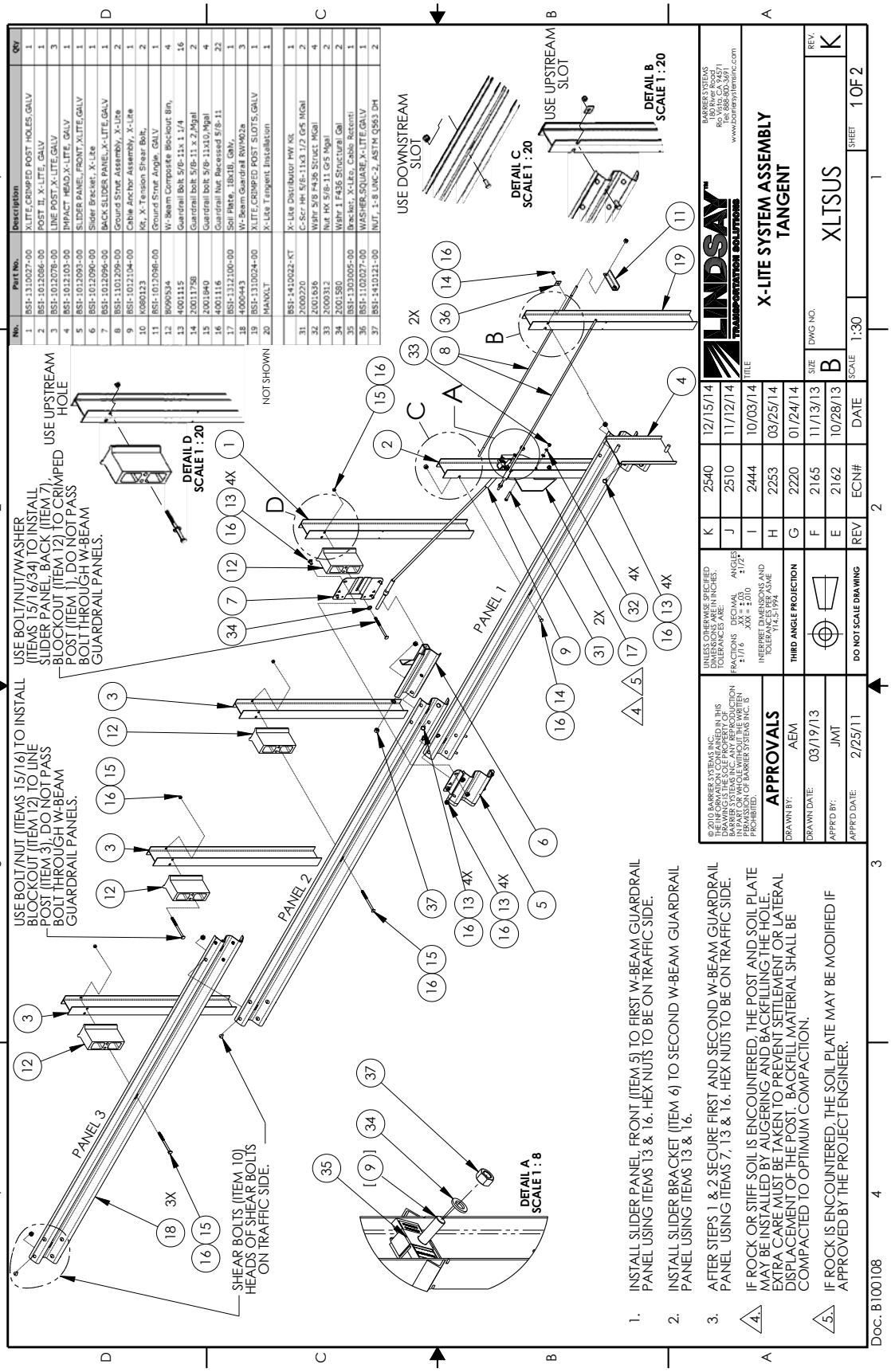

No.	Part No.	Description	Qty
1	BSI-1310027-00	X-LITE,CRIMPED POST HOLES,GALV	1
2	BSI-1012086-00	POST II, X-LITE, GALV	1
3	BSI-1012076-00	LINE POST X-LITE,GALV	3
4	BSI-1012103-00	IMPACT HEAD,X-LITE, GALV	1
5	BSI-1012093-00	SLIDER PANEL, FRONT,X-LITE,GALV	1
6	BSI-1012090-00	Slider Bracket, X-Lite	1
7	BSI-1012096-00	BACK SLIDER PANEL,X-LITE,GALV	1
8	BSI-1101299-00	Ground Strut Assembly, X-Lite	2
9	BSI-1012104-00	Cable Anchor Assembly, X-Lite	1
10	K080123	Kit, X-Tension Shear Bolt,	2
11	BSI-1012098-00	Ground Strut Angle, GALV	1
12	B090324	W-Beam Composite Blockout Bin,	4
13	4001115	Guardrail Bolt 5/8-11x 1 1/4	16
14	20011780	Guardrail bolt 5/8-11 x 2,Mgal	2
15	2001840	Guardrail bolt 5/8-11x10,Mgal	4
16	4001116	Guardrail Nut Recessed 5/8-11	22
17	BSI-1312100-00	Soil Plate, 18x18, Galv,	1
18	4000443	W-Beam Guardrail RWM62a	3
19	BSI-1310024-00	X-LITE,CRIMPED POST SLOTS,GALV	1
20	MANXLT	X-Lite Tangent Installation	1
	BSI-1410022-KT	X-Lite Distributor HW Kit	1
31	2000220	C-Scr HH 5/8-11x3 1/2 Gr5 MGal	2
32	2001535	WSHr 5/8 F436 Strucl MGal	4
33	2000312	Nut HX 5/8-11 Gr5 Mgal	2
34	2001380	WSHr 1 F436 Structural Gal	2
35	BSI-1303005-00	Bracket, X-Lite, Cable Retent	1
36	BSI-1102027-00	WASHER,SQUARE,X-LITE,GALV	1
37	BSI-1410121-00	NUT, 1-8 UNC-2, ASTM Q563 DH	2

NOT SHOWN

Appendix A - System Configuration, 37’ 6”

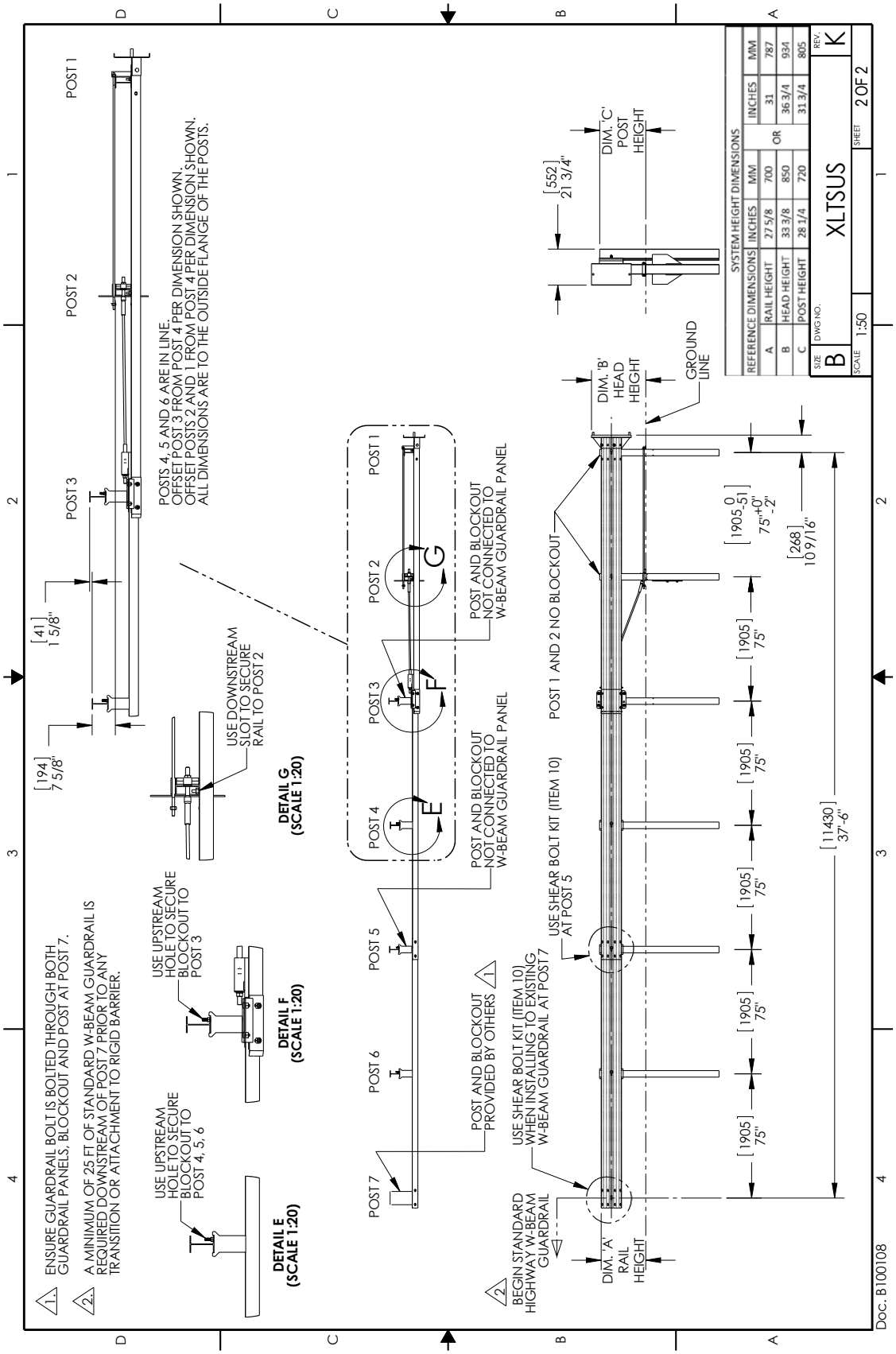

INSTALLATION AND MAINTENANCE MANUAL

X-TENSION®

NCHRP 350 TL-3 Tangent / Flared End Terminal and Median Attenuator

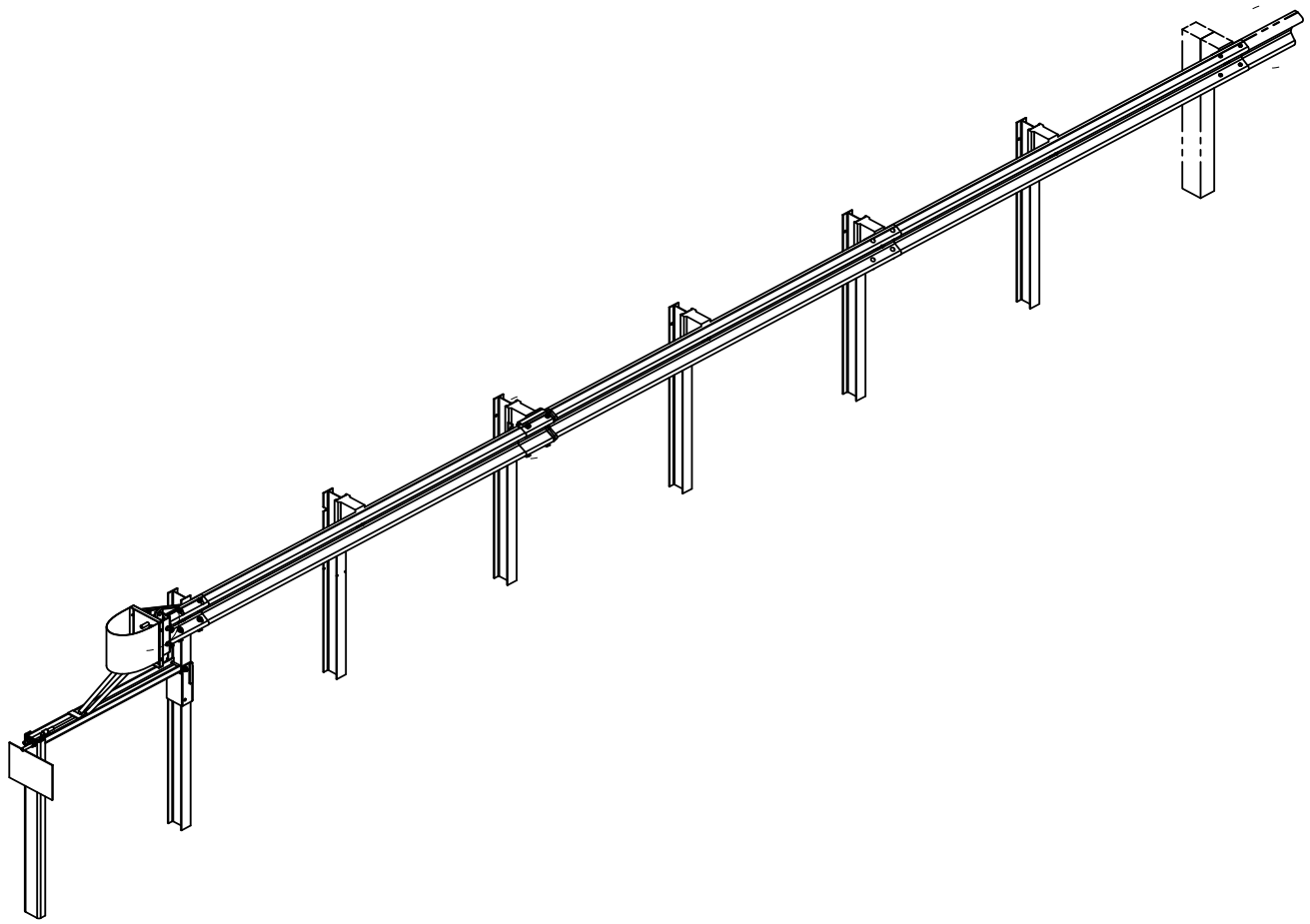

BARRIER SYSTEMS®
BY LINDSAY

Item	Qty	Part Description	Part#	U/M
1	1.00	X-Tension Terminal Component Kit	K070201	EACH
2	1.00	X-Tension Hardware Kit, GT,Std For XTGTK	K070202	EACH
3	1.00	X-Tension System Hardware Kit, GT, Std, XTGTSS2 or 3	K070206	EACH
4	1.00	X-Tension GT Guardrail Component Kit 3	K070210	EACH
5	1.00	I-BEAM POST, MIDDLE, X350	B061100	EACH

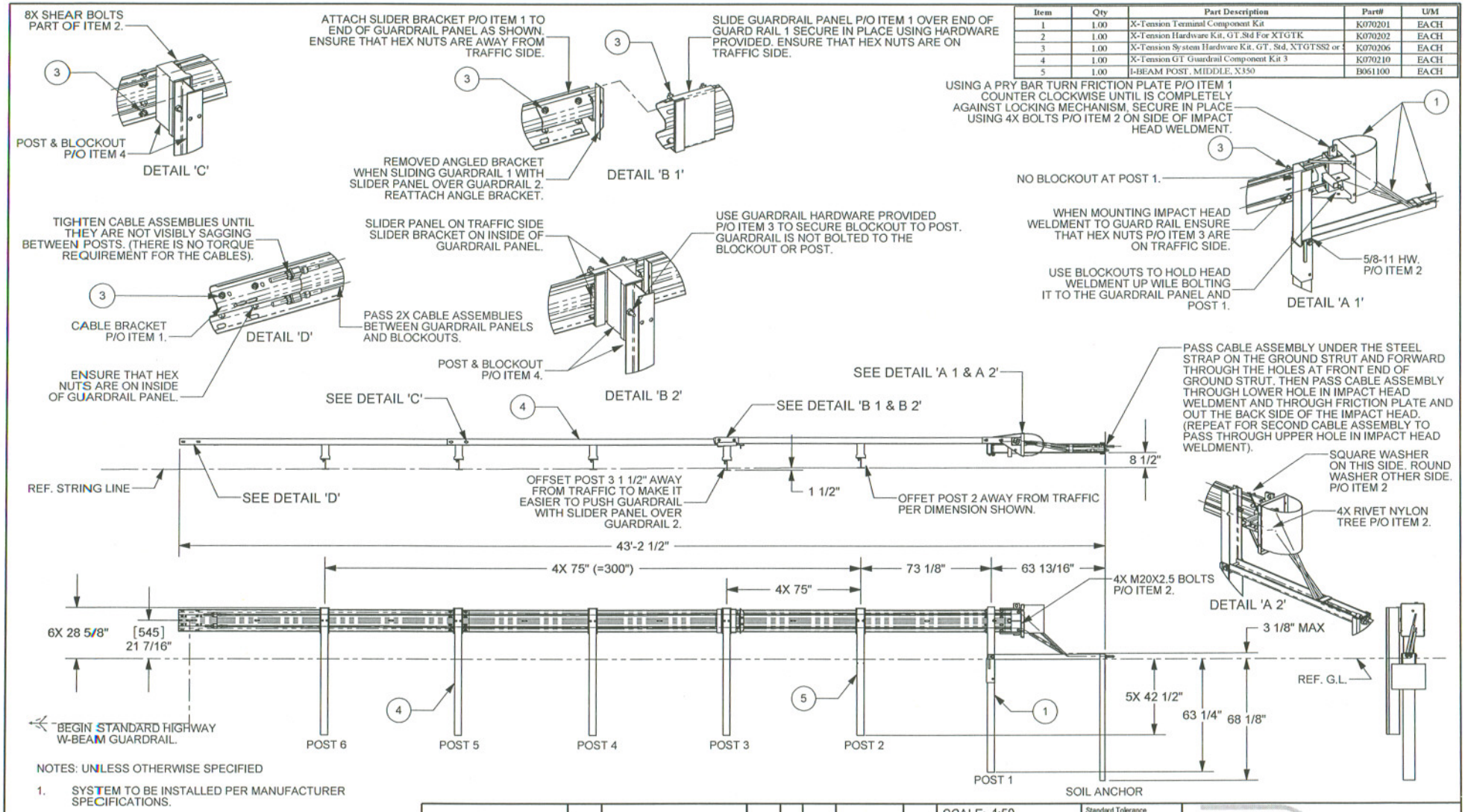

NOTES: UNLESS OTHERWISE SPECIFIED

1. SYSTEM TO BE INSTALLED PER MANUFACTURER SPECIFICATIONS.
2. ONLY TIGHTEN THE CABLE ASSEMBLIES USING THE NUTS AT THE CABLE BRACKET (SEE DETAIL 'D'). DO NOT TIGHTEN THE CABLES AT THE FRONT OF THE GROUND ANCHOR.
3. WHEN DRIVING STEEL POST, ENSURE THAT A DRIVING CAP WITH TIMBER OR PLASTIC INSERT IS USED TO PREVENT DAMAGE TO THE GALVANIZING TO THE TOP OF THE POST.

© 2007 Barrier Sytems Inc.

The information here on is proprietary to Barrier Systems Inc. shall not be disclosed, duplicated or used otherwise without the express written approval of Barrier Systems Inc.

REV.	CHANGES	DATE	BY	REQ'D	NEXT ASSY.	ITEM
B	SEE ECN# 942	8/31/07	AEM			
A	SEE ER# 531	8/08/07	AEM			

SCALE: 1:50

	DATE	INIT.
DRAWN BY	08/06/07	AEM
APPR'D BY		

Standard Tolerance
Angular ± 1/2°
Fractional ± 1/16"
Dec .XXX= ± .010
Dec .XX= ± .030

TITLE:
X-TENSION GUARDRAIL TERMINAL SYSTEM
STEEL POST WITH COMPOSIT BLOCKOUT

BARRIER SYSTEMS INC
180 RIVER RD, RIO VISTA, CA 94571
TEL: 707-374-6800 FAX: 707-374-6801

SHEET	DRAWING NUMBER	REV
1 OF 1	XTGTSS3	B

NOTES: UNLESS OTHERWISE SPECIFIED

1. X-TENSION SYSTEM TO BE INSTALLED PER MANUFACTURER SPECIFICATIONS.
2. SYSTEM SHOWN USING STEEL WIDE FLANGE POST (PWE01) WITH TIMBER BLOCKOUTS (ROUTED, PDB01b). IF STEEL WIDE FLANGE POSTS ARE USED, POST 2 MUST BE A BREAKAWAY STYLE POST CRIMPED (AS SHOWN), TIMBER CRT POST, OR EQUIVALENT.
3. SYSTEM MAY ALSO USE TIMBER CRT POSTS (PDE09) WITH TIMBER BLOCKOUTS (PDB01a).
4. SYSTEM MAY ALSO USE COMPOSITE OR PLASTIC BLOCKOUTS.

Item	Qty	Part Description	Part#	U/M
1	1.00	GROUND STRUT WELDMENT, X350	B061094	EACH
2	1.00	SOIL ANCHOR WELDMENT, X350	B061104	EACH
3	1.00	BOTTOM POST WELDMENT, X350	B061098	EACH
4	1.00	I-BEAM POST, TOP, X350	B061099	EACH
5	1.00	HEAD UNIT WELDMENT, X350	B061072	EACH
6	3.00	W-Beam Guardrail RWMO2b	4002018	EACH
7	1.00	I-BEAM POST, MIDDLE, X350	B061100	EACH
8	1.00	SLIDER PANEL WELDMENT, W-BEAM, X350	B061088	EACH
9	1.00	SLIDER BRACKET WELDMENT, X350	B061079	EACH
10	1.00	CABLE BRACKET WELDMENT, X350	B061083	EACH
11	2.00	CABLE ASSEMBLY, X350	B061109	EACH
12	1.00	CABLE FRICTION PLATE, HEAD UNIT	B061058	EACH
13	1.00	NOSE PIECE, X350	B061105	EACH
14	5.00	W-Beam Timber Blockout PDB1b 8	4002337	EACH
15	4.00	Rivet Nylon Tree Push-In 25/64	4002305	EACH
16	8.00	SHEAR BOLT, US, X-TENSION	A070426	EACH
17	20.00	Guardrail Bolt 5/8-11x1 1/4 MG	2001642	EACH
18	1.00	C-Scr HH 5/8-11x1 1/2 Gr5 MGal	2001626	EACH
19	4.00	C-Scr HH M20-2.5x75mm Gr 5.8 M	2001615	EACH
20	1.00	C-Scr HH 3/4-10x8 Gr5 MGal	2001653	EACH
21	2.00	Wshr 5/8 F436 Struct MGal	2001636	EACH
22	2.00	Wshr SAE 3/4 HD MGal	2001630	EACH
23	1.00	Nut HN 3/4-10 HVY Gr2 MGal	2001631	EACH
24	33.00	Guardrail Nut Recessed 5/8-11	4001116	EACH
25	5.00	Bolt CH 5/8-11x10 Gr5 MGal	2001635	EACH
26	4.00	Wide Flange Guardrail Post PWE	4002338	EACH
27	5.00	Wshr 5/8 Rd Galv AASHTO Spec F	4002056	EACH
28	1.00	Nut HN 5/8-11 Gr8 MGal	2001632	EACH

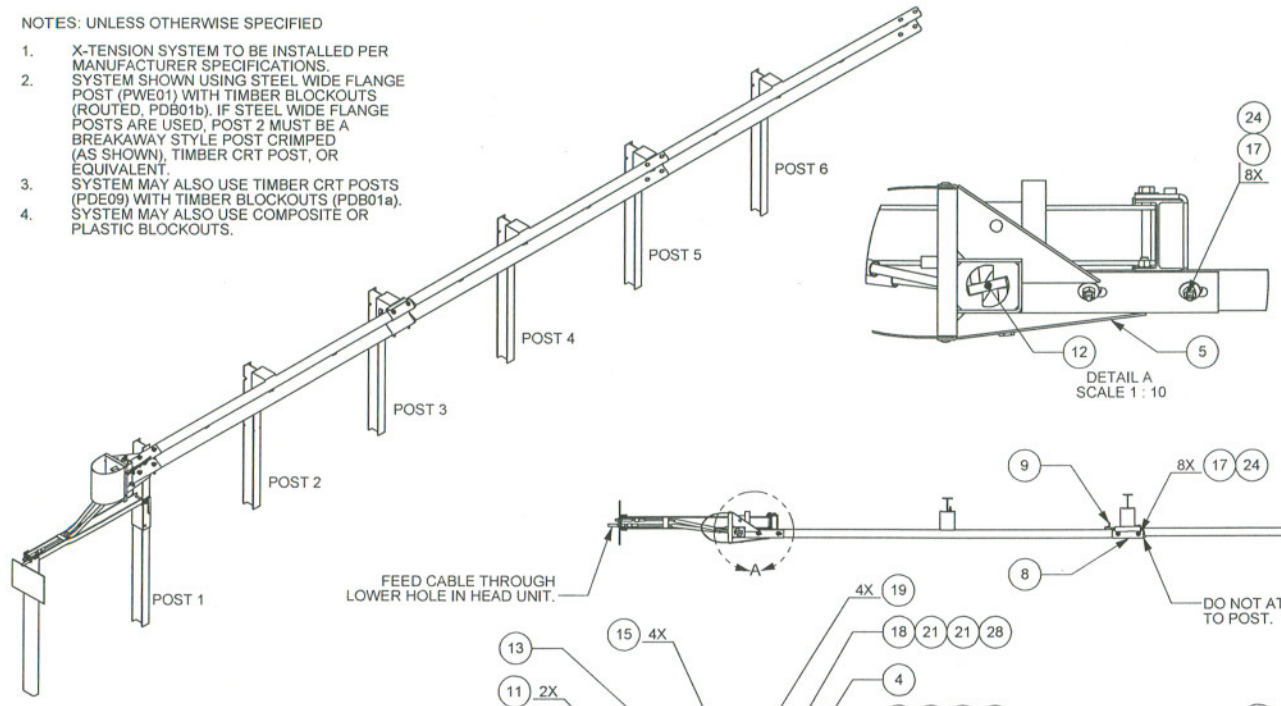

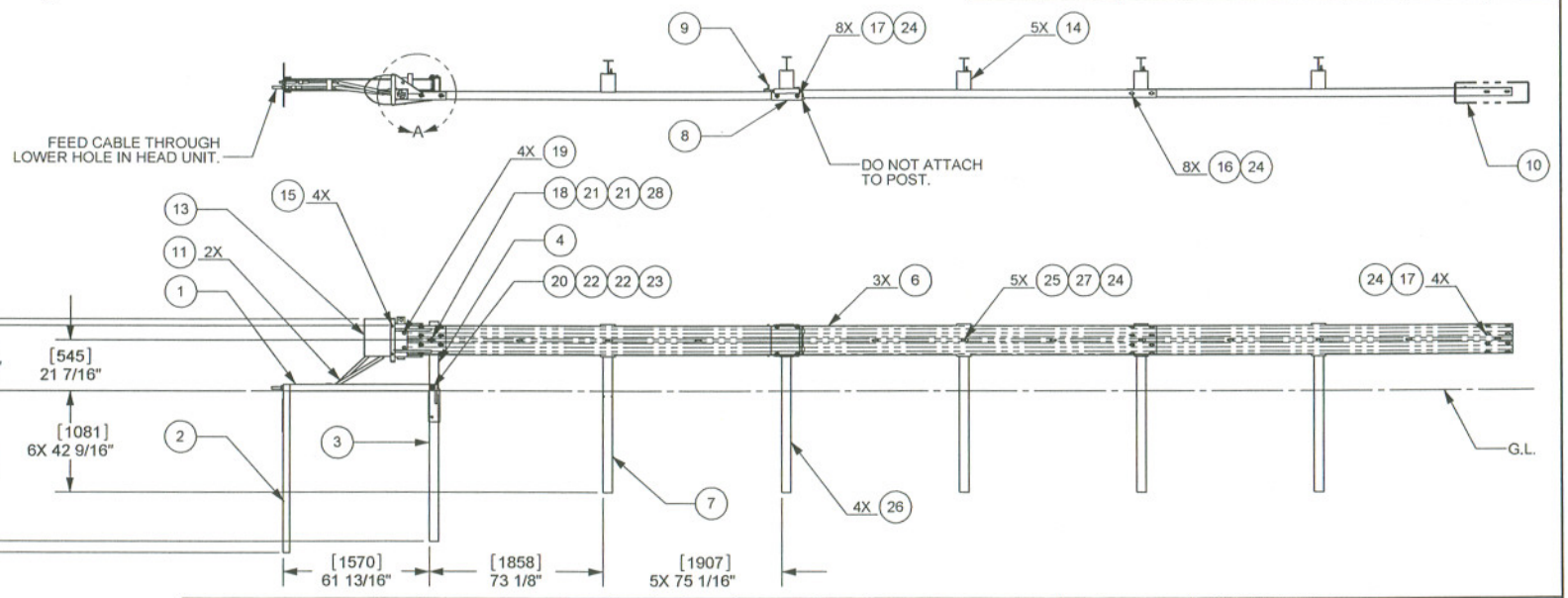

© 2006 Barrier Sytems Inc.

The information heron is proprietary to Barrier Systems Inc. shall not be disclosed, duplicated or used otherwise without the express written approval of Barrier Systems Inc.

REV.	CHANGES	DATE	BY	REQ'D	NEXT ASSY.	ITEM
C	SEE ECN# 871	1/25/07	AEM			
B	SEE ECN# 840	2/21/07	AEM			
A	SEE ECN# 821	1/25/07	AEM			

SCALE: 1:50

	DATE	INIT.
DRAWN BY	10/26/06	AEM
APPR'D BY		

Standard Tolerance
Angular ± 1/2°
Fractional ± 1/16"
Dec .XXX= ± .010
Dec .XX= ± .030

TITLE:
SYSTEM, X-TENSION GUARDRAIL TERMINAL

BARRIER SYSTEMS INC
180 RIVER RD, RIO VISTA, CA 94571
TEL: 707-374-6800 FAX: 707-374-6801

SHEET	DRAWING NUMBER	REV
1 OF 1	B061113	C

Dist	COUNTY	ROUTE	POST MILES TOTAL PROJECT	SHEET No.	TOTAL SHEETS
05	SLO	41	19.7/R42.2	11	??

REGISTERED CIVIL ENGINEER DATE

6-13-16
PLANS APPROVAL DATE

REGISTERED PROFESSIONAL ENGINEER MICHAEL JAMES DAY No. 66870 Exp. 9/30/16 CIVIL STATE OF CALIFORNIA

THE STATE OF CALIFORNIA OR ITS OFFICERS OR AGENTS SHALL NOT BE RESPONSIBLE FOR THE ACCURACY OR COMPLETENESS OF SCANNED COPIES OF THIS PLAN SHEET.

NOTE:
1. USE 15'-7½" LENGTH RAIL.

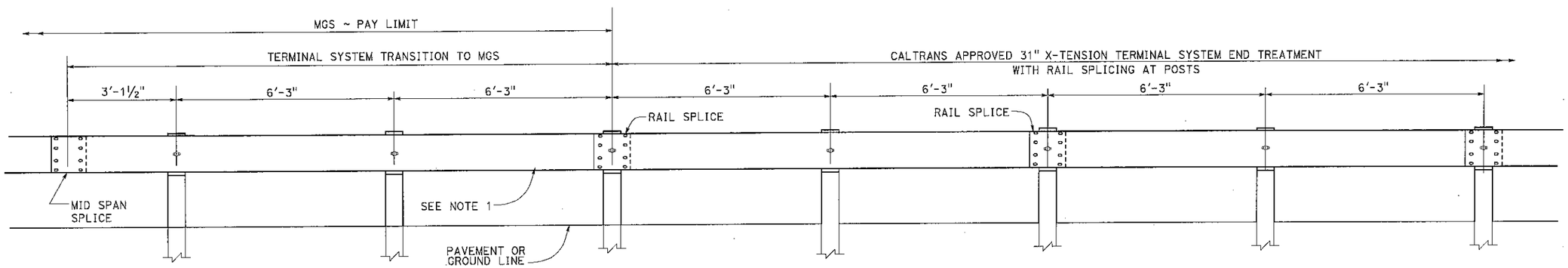

TRANSITION DETAIL FOR 31" X-TENSION TERMINAL SYSTEM END TREATMENT WITH RAIL SPLICING AT POSTS TO MIDWEST GUARDRAIL SYSTEM

EXISTING UTILITY FACILITIES HAVE NOT BEEN PLOTTED ON PORTIONS OF THESE PLANS

CONSTRUCTION DETAILS

SCALE AS SHOWN

C-9

STATE OF CALIFORNIA - DEPARTMENT OF TRANSPORTATION
Caltrans
06-DESIGN

FUNCTIONAL SUPERVISOR: SCOTT SHAVER
CALCULATED-DESIGNED BY: MAGDI MARZOUK
CHECKED BY: MICHAEL DAY
REVISED BY
DATE REVISED

LAST REVISION DATE PLOTTED => 10-JUN-2016
06-10-16 TIME PLOTTED => 07:03

End Terminals

MASH Compliant

SoftStop® System

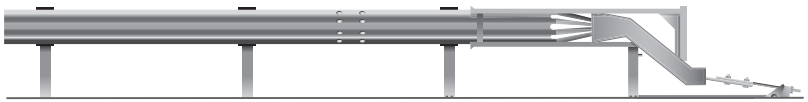

TRINITY HIGHWAY

Ahead of the Curve™

SoftStop® System

The SoftStop® System is a tangent, single-sided, energy absorbing, redirective and gating end terminal. The SoftStop System is the first end terminal to meet the evaluation criteria set forth in the Manual for Assessing Roadside Safety Hardware (MASH). It is also available in Test Level 1 and Test Level 2 configurations.

During head-on impacts within MASH criteria, the SoftStop System is designed to dissipate energy by the head traveling down the anchored panels. During length-of-need side impacts within MASH criteria, the SoftStop System is designed to contain and redirect the impacting vehicle.

FRONT ANCHOR TECHNOLOGY

Features

- The front anchorage is designed to allow the rail panels to remain anchored during end-on impacts within MASH criteria.
- Narrow head design helps minimize nuisance impacts from vehicles and maintenance operations, such as mowing and snow removal.

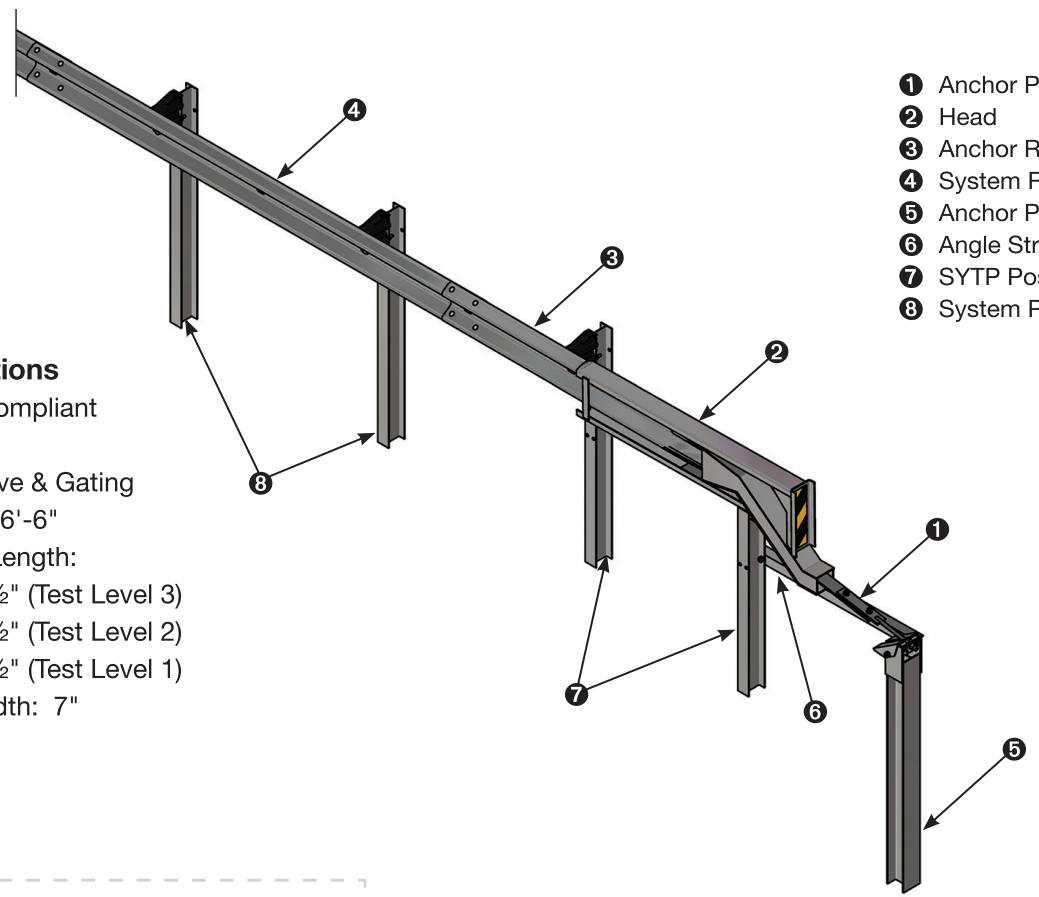

Specifications

- MASH Compliant
- Tangent
- Redirective & Gating
- BLON: 16'-6"
- System Length:
  - 50'-9 ½" (Test Level 3)
  - 38'-3 ½" (Test Level 2)
  - 25'-9 ½" (Test Level 1)
- Head Width: 7"

Distributed by:

12-15

www.trinityhighway.com

1.888.323.6374

TRINITY HIGHWAY

Copyright © 2015 Trinity Highway Products, LLC. All Rights Reserved.

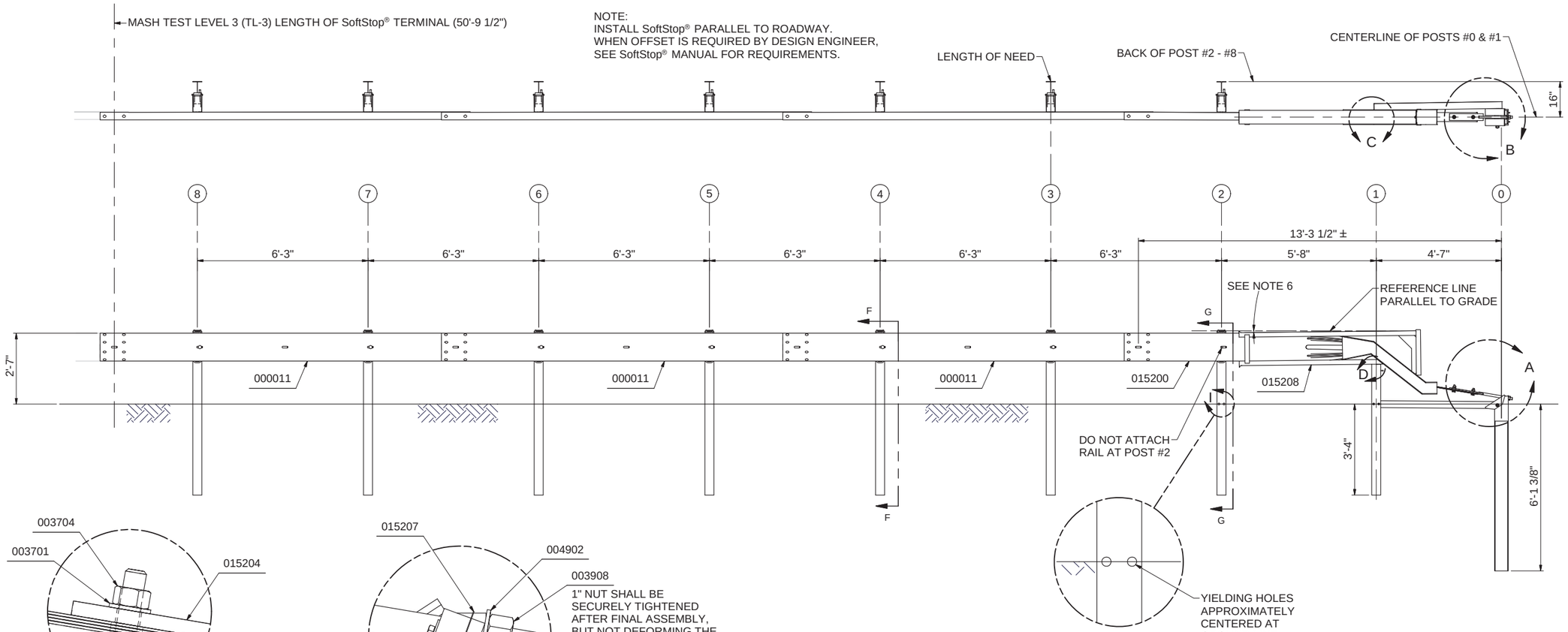

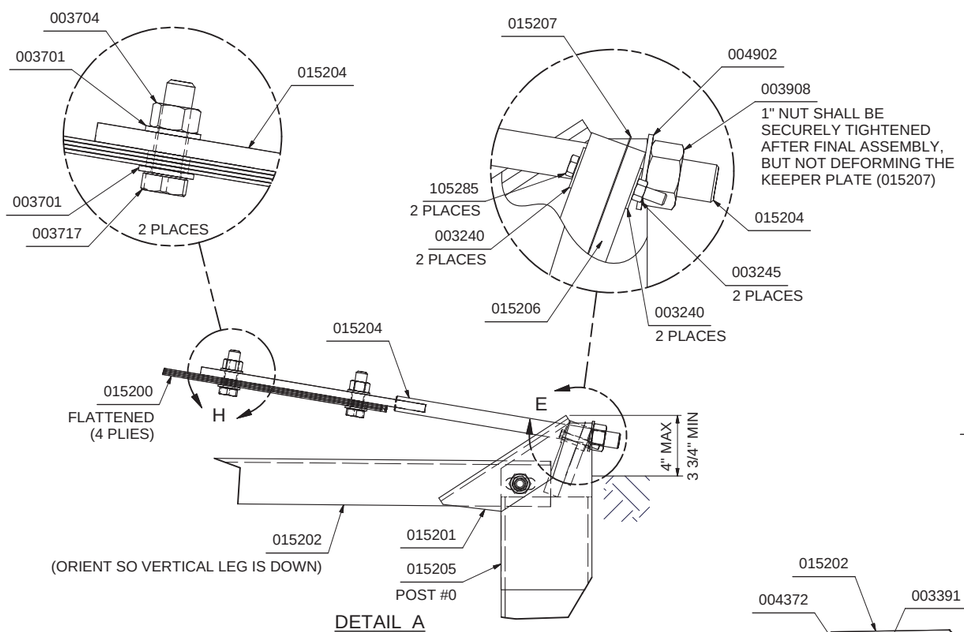

DETAIL A

DETAIL I
POSTS #1 & #2

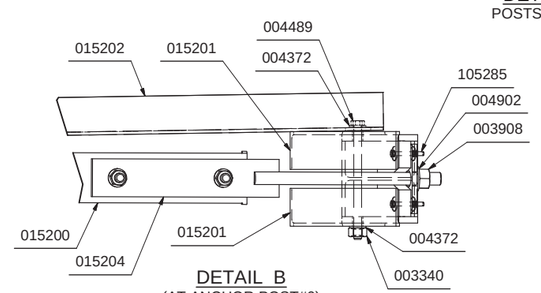

DETAIL B
(AT ANCHOR POST#0)

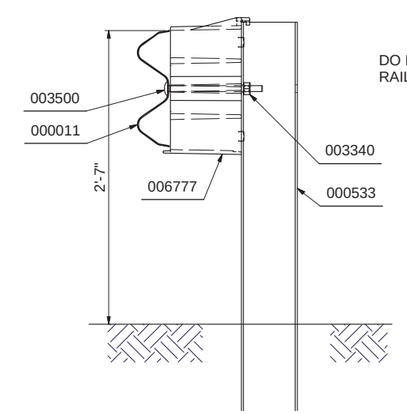

SECTION F-F
(POST #3 - #8)

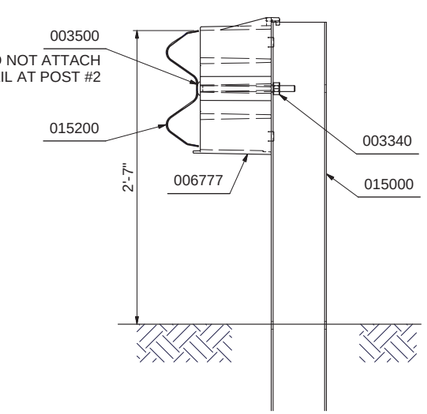

SECTION G-G
(POST #2)

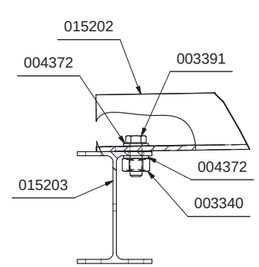

DETAIL C
(POST #1, SHOWN NEAR GROUND)

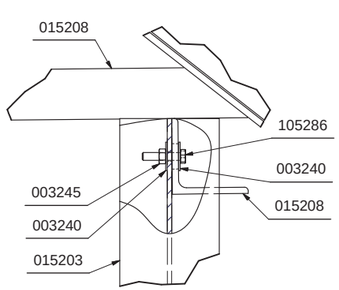

DETAIL D
(POST #1)

NOTES:
1. REFER TO SoftStop® ASSEMBLY MANUAL.
2. PROPER SITE GRADING SHOULD BE ACCOMPLISHED IN ACCORDANCE WITH LOCAL SPECIFYING AGENCY GUIDELINES AND THE AASHTO ROADSIDE DESIGN GUIDE.
3. DO NOT ATTACH THE SoftStop® DIRECTLY TO A RIGID BARRIER.
4. UNDER NO CIRCUMSTANCES SHALL THE GUARDRAIL WITHIN THE SoftStop® BE CURVED.
5. MANUFACTURER SUGGESTS CUSTOMER TO PROVIDE REFLECTORIZATION OF THE TERMINAL.
6. IT IS ACCEPTABLE TO INSTALL THE SoftStop® IMPACT HEAD PARALLEL TO THE GRADE LINE OR WITH AN UPWARD TILT. SEE SoftStop® ASSEMBLY MANUAL FOR SPECIFIC DETAILS.

PARTS LIST

PART NO.	QTY.	DESCRIPTION
000011	3	12/12'6/3'1.5/S
000533	6	6'0 POST - W6 x 8.5
006777	7	KING BLOCK
015000	1	6'0 SYT PST/8.5/31" GR HT
015200	1	SFST-ANCHOR G.RAIL 12'-6"
015201	2	SFST-ANCHOR ANGLE
015202	1	SFST-ANGLE STRUT
015203	1	SFST-POST#1 SYTP
015204	1	SFST-ANCHOR PADDLE
015205	1	SFST-POST#0
015206	1	SFST-PLATE WASHER
015207	1	SFST-KEEPER PLATE
015208	1	SFST-IMPACT HEAD
		~ HARDWARE ~
003240	6	5/16 ROUND WASHER WIDE
003245	3	5/16 HEX NUT
003340	41	5/8" GR HEX NUT
003360	32	5/8"X1.25" GR BOLT
003391	1	5/8"X1.75" HEX BOLT A325
003500	7	5/8 GUARD RAIL BOLT x 10"
003701	4	3/4" ROUND WASHER F436
003704	2	3/4" HVY HEX NUT A563 DH
003717	2	3/4"X2.5" HEX BOLT A325
003908	1	1" HVY HEX NUT A563 DH
004372	4	5/8" WASHER F436
004489	1	5/8"X9" HEX BOLT A325
004902	1	1" ROUND WASHER F436
105285	2	5/16"X2.5" HEX BOLT GRD 5
105286	1	5/16"X1.5" HEX BOLT GRD 5

MATERIAL: SEE PARTS LIST	DRAWN: BT	DATE: 11/14/2012	TOLERANCES PER CEMC-THP-SF-001, UNLESS OTHERWISE SPECIFIED.
	CHECKED: BS	DATE: 11/14/2012	
FINISH: N/A	UNLESS OTHERWISE NOTED, ALL DIMENSIONS ARE IN FEET-INCHES. DIMENSIONS ACCORDING TO ASME Y14.5M-1994 UNLESS OTHERWISE SPECIFIED.		DO NOT SCALE DRAWING
ESTIMATED WEIGHT: 1221.7 lbmass			

SoftStop® TERMINAL (8" BLOCKS)
PLAN, ELEVATION & SECTION
MASH TEST LEVEL 3 (TL-3)
P/N: 500646B

DRAWING: SS 646 SHEET: 1 of 1

TRINITY HIGHWAY

© 2012-2015 Trinity Highway Products, LLC. All rights reserved.

MATERIALS INFORMATION

5. Alternative Flared Terminal System

Assembly Instructions for

SKT-SP-MGS *Tangent Terminal*

and

FLEAT-SP-MGS *Flared Terminal*

SP – Standard Post System Terminals For
31" MGS (Midwest Guardrail System)

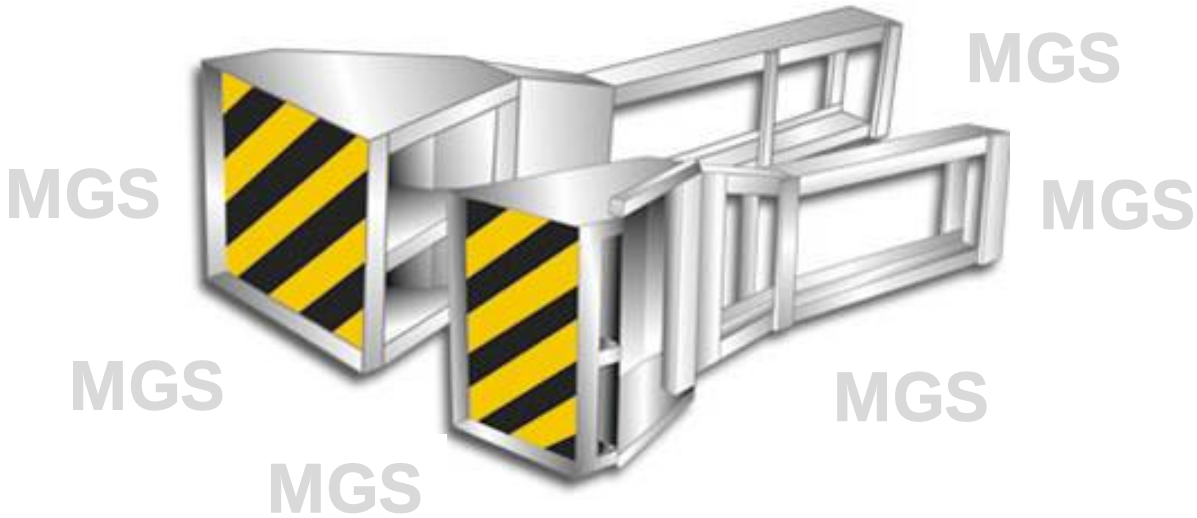

ROAD SYSTEMS, INC.
P. O. Box 2163
Big Spring, Texas 79721
Phone: (432) 263-2435 FAX: (432) 267-4039

Technical Support & Marketing Phone: (330) 346-0721
Technical Support & Marketing Fax: (330) 346-0722

All RSI Installation Manuals can be downloaded from RSI web site
www.roadsystems.com

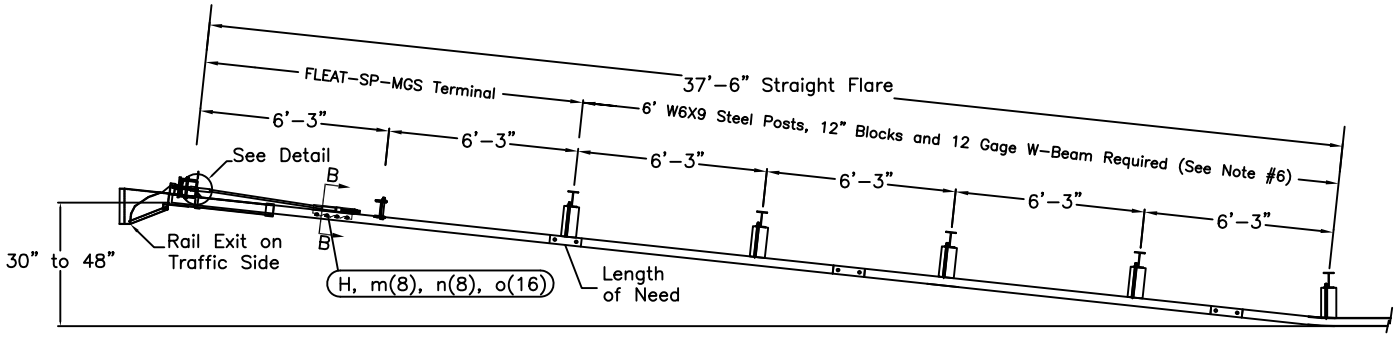

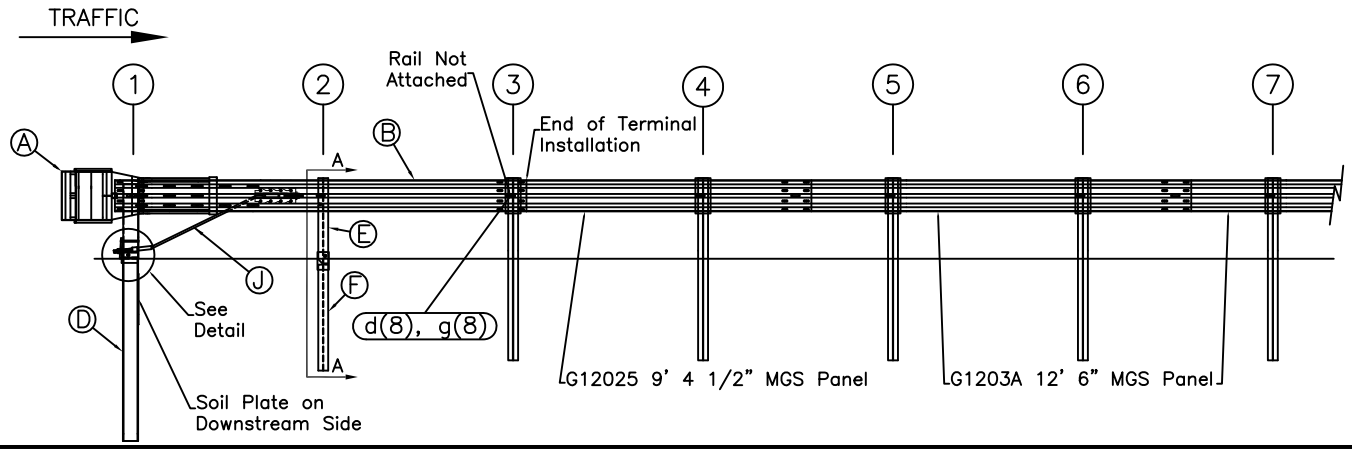

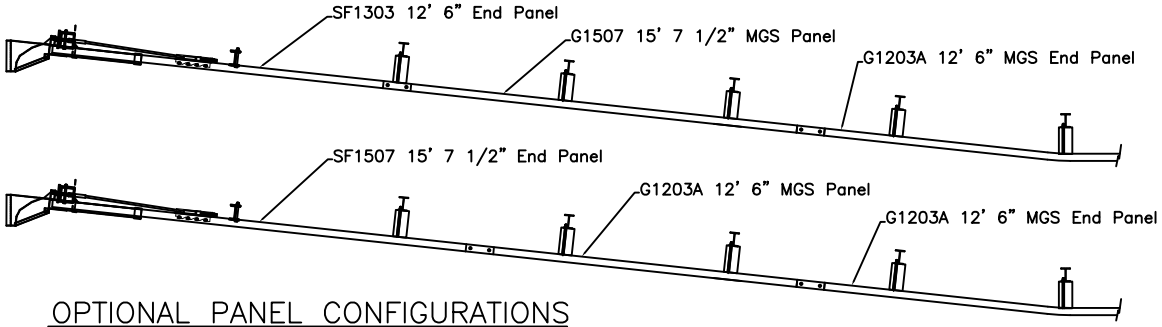

OPTIONAL PANEL CONFIGURATIONS

ITEM	QTY	BILL OF MATERIALS (TERMINAL)	ITEM NO.
A	1	IMPACT HEAD	F3000
B	1	W-BEAM GUARDRAIL END SECTION, 12 Ga.	SF1303
C	1	FIRST POST TOP (6X6X1/8" Tube)	TPHP1A
D	1	FIRST POST BOTTOM (6' W6X15)	TPHP1B
E	1	SECOND POST ASSEMBLY TOP	UHP2A
F	1	SECOND POST ASSEMBLY BOTTOM	HP3B
G	1	BEARING PLATE	E750
H	1	CABLE ANCHOR BOX	S760
J	1	BCT CABLE ANCHOR ASSEMBLY	E770
K	1	BEARING PLATE RETAINER TIE	CT-100S
		HARDWARE (ALL DIMENSIONS IN INCHES)	
a	2	5/16 x 1 HEX BOLT GRD 5	B5160104A
b	4	5/16 WASHER	W0516
c	2	5/16 HEX NUT	N0516
d	9	5/8 Dia. x 1 1/4 SPLICE BOLT	B580122
e	1	5/8 Dia. x 9 HEX BOLT GRD 5	B580904A
f	3	5/8 WASHER	W050
g	10	5/8 Dia. H.G.R NUT	N050
h	1	3/4 Dia. x 8 1/2 HEX BOLT GRD A449	B340854A
j	1	3/4 Dia. HEX NUT	N030
k	2	1 ANCHOR CABLE HEX NUT	N100
l	2	1 ANCHOR CABLE WASHER	W100
m	8	CABLE ANCHOR BOX SHOULDER BOLT	SB58A
n	8	1/2 A325 STRUCTURAL NUT	N055A
o	16	1 1/16 OD x 9/16 ID A325 STR. WASHER	W050A

GENERAL NOTES:

1. All bolts, nuts, cable assemblies, cable anchors and bearing plates shall be galvanized.
2. The lower sections of the Posts 1&2 shall not protrude more than 4 in above the ground (measured along a 5' cord). Site grading may be necessary to meet this requirement.
3. The lower sections of the hinged posts should not be driven with the upper post attached. If the post is placed in a drilled hole, the backfill material must be satisfactorily compacted to prevent settlement.
4. When competent rock is encountered, a 12" Ø post hole, 20 in. deep cored into the rock surface may be used if approved by the engineer for post 1. Granular material will be placed in the bottom of the hole, approximately 2.5" deep to provide drainage. The first post can be field cut to length, placed in the hole and backfilled with suitable backfill. The soil plate may be trimmed if required.
5. The breakaway cable assembly must be taut. A locking device (vice grips or channel lock pliers) should be used to prevent the cable from twisting when tightening nuts.
6. Additional components required downstream of terminal (see plan for required w-beam rail sections):

QTY	Desc.	Item#
8	5/8" x 1 1/4" Splice Bolt	B580122
13	5/8" Dia. H.G.R. Nut	N030
5	6x9 Steel Post	P621
5	MGS Block	P618
5	5/8" x 14" H.G.R. Bolt	B581402

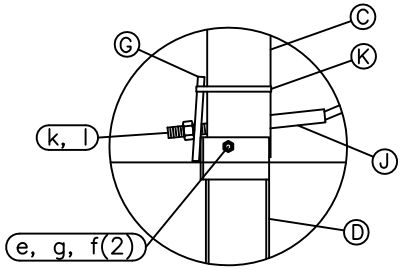

Post #1 Connection Detail

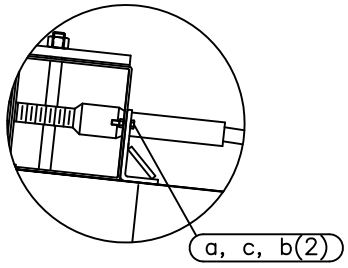

Impact Head Connection Detail

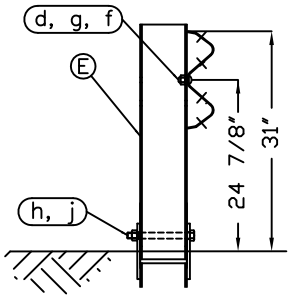

SECTION A–A
Post #2

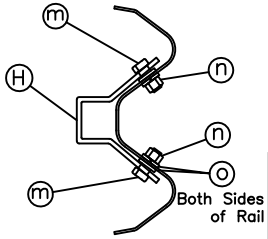

SECTION B–B
Anchor Bracket

RSI
Road Systems, Inc.
Big Spring, TX
Sales: 432-263-2435
Technical: 330-346-0721

FLEAT-SP-MGS Terminal
Midwest Guardrail System
31" Top of Rail

Sheet: 1
Date: 01/15/12
By: JRR
Drawing Name: FLT-SP-S-MGS
Scale: None
Rev: 0

Appendix A - System Configuration, 37' 6" MGS

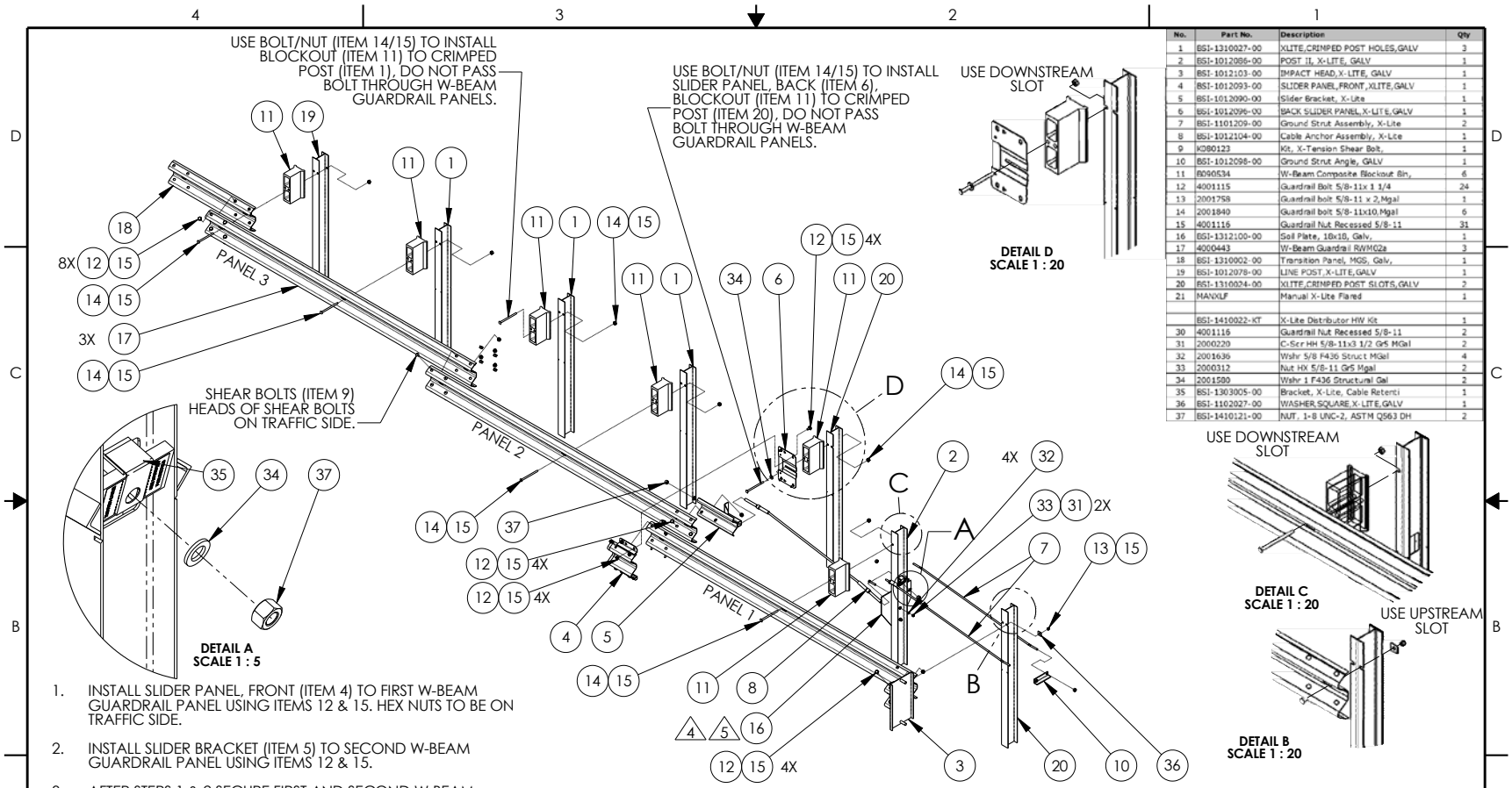

No.	Part No.	Description	Qty
1	BSI-1310027-00	XLITE,CRIMPED POST HOLES,GALV	3
2	BSI-1012086-00	POST II, X-LITE, GALV	1
3	BSI-1012103-00	IMPACT HEAD,X-LITE, GALV	1
4	BSI-1012093-00	SLIDER PANEL,FRONT,XLITE,GALV	1
5	BSI-1012090-00	Slider Bracket, X-Lite	1
6	BSI-1012096-00	BACK SLIDER PANEL,X-LITE,GALV	1
7	BSI-1101209-00	Ground Strut Assembly, X-Lite	2
8	BSI-1012104-00	Cable Anchor Assembly, X-Lite	1
9	K080123	Kit, X-Tension Shear Bolt,	1
10	BSI-1012098-00	Ground Strut Angle, GALV	1
11	B090534	W-Beam Composite Blockout Bln,	6
12	4001115	Guardrail Bolt 5/8-11x 1 1/4	24
13	2001758	Guardrail bolt 5/8-11 x 2,Mgal	1
14	2001840	Guardrail bolt 5/8-11x10,Mgal	6
15	4001116	Guardrail Nut Recessed 5/8-11	31
16	BSI-1312100-00	Soil Plate, 10x10, Galv,	1
17	4000443	W-Beam Guardrail RWM02a	3
18	BSI-1310002-00	Transition Panel, MGS, Galv,	1
19	BSI-1012078-00	LINE POST,X-LITE,GALV	1
20	BSI-1310024-00	XLITE,CRIMPED POST SLOTS,GALV	2
21	MANXLF	Manual X-Lite Flared	1
	BSI-1410022-KT	X-Lite Distributor HW Kit	1
30	4001116	Guardrail Nut Recessed 5/8-11	2
31	2000220	C-Scr HH 5/8-11x3 1/2 Gr5 MGal	2
32	2001636	Wshr 5/8 F436 Struct MGal	4
33	2000312	Nut HX 5/8-11 Gr5 Mgal	2
34	2001500	Wshr 1 F436 Structural Gal	2
35	BSI-1303005-00	Bracket, X-Lite, Cable Retenti	1
36	BSI-1102027-00	WASHER,SQUARE,X-LITE,GALV	1
37	BSI-1410121-00	NUT, 1-8 UNC-2, ASTM Q563 DH	2

1. INSTALL SLIDER PANEL, FRONT (ITEM 4) TO FIRST W-BEAM GUARDRAIL PANEL USING ITEMS 12 & 15. HEX NUTS TO BE ON TRAFFIC SIDE.
2. INSTALL SLIDER BRACKET (ITEM 5) TO SECOND W-BEAM GUARDRAIL PANEL USING ITEMS 12 & 15.
3. AFTER STEPS 1 & 2 SECURE FIRST AND SECOND W-BEAM GUARDRAIL PANEL USING ITEMS 6, 12 & 15. HEX NUTS TO BE ON TRAFFIC SIDE.
4. IF ROCK OR STIFF SOIL IS ENCOUNTERED, THE POST AND SOIL PLATE MAY BE INSTALLED BY AUGERING AND BACKFILLING THE HOLE. EXTRA CARE MUST BE TAKEN TO PREVENT SETTLEMENT OR LATERAL DISPLACEMENT OF THE POST. BACKFILL MATERIAL SHALL BE COMPACTED TO OPTIMUM COMPACTION.
5. IF ROCK IS ENCOUNTERED, THE SOIL PLATE MAY BE MODIFIED IF APPROVED BY THE PROJECT ENGINEER.

© 2010 BARRIER SYSTEMS INC. THE INFORMATION CONTAINED IN THIS DRAWING IS THE SOLE PROPERTY OF BARRIER SYSTEMS INC. ANY REPRODUCTION IN PART OR WHOLE WITHOUT THE WRITTEN PERMISSION OF BARRIER SYSTEMS INC. IS PROHIBITED.

APPROVALS

DRAWN BY:	JMT
DRAWN DATE:	10/09/13
APPR'D BY:	GAD
APPR'D DATE:	10/09/13

UNLESS OTHERWISE SPECIFIED DIMENSIONS ARE IN INCHES. TOLERANCES ARE:
FRACTIONS ±1/16 DECIMAL .XX = ±.03 .XXX = ±.010 ANGLES ±1/2°
INTERPRET DIMENSIONS AND TOLERANCES PER ASME Y14.5-1994

THIRD ANGLE PROJECTION

DO NOT SCALE DRAWING

REV	ECN#	DATE
F	2540	12/12/14
E	2533	12/01/12
D	2444	09/26/14
C	2253	03/25/14
B	2220	01/23/14
A	2165	11/13/13
0	2151	10/09/13

LINDSAY™ TRANSPORTATION SOLUTIONS

BARRIER SYSTEMS
180 River Road
Rio Vista, CA 94571
Tel: 888-800-3691
www.barriersystemsinc.com

TITLE
X-LITE SYSTEM ASSEMBLY FLARED TRANSITION TO MGS

SIZE B | DWG NO. XLFSUS-MGS | REV. F
SCALE 1:40 | SHEET 1 OF 2

Doc. B100108

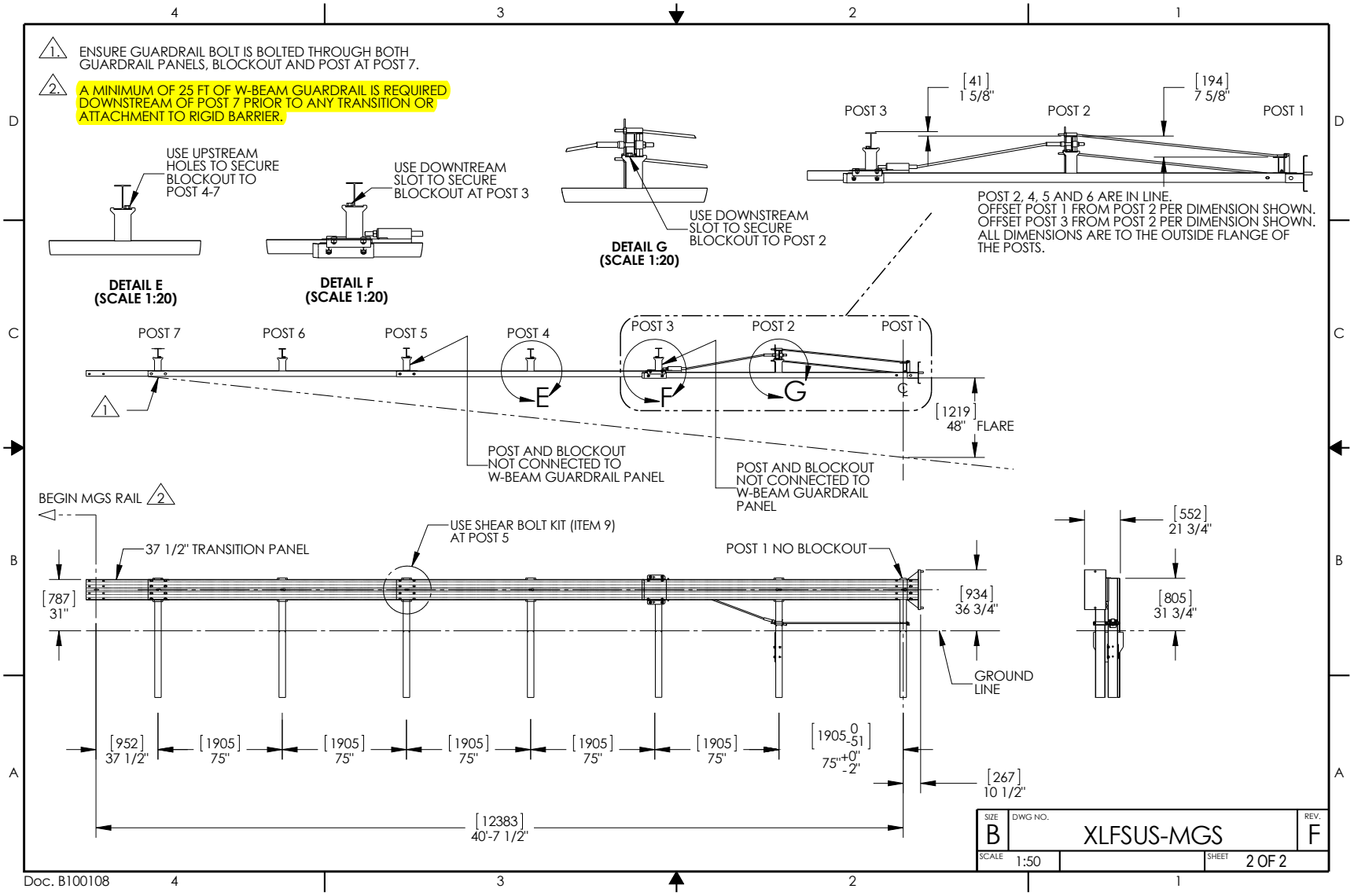
1. ENSURE GUARDRAIL BOLT IS BOLTED THROUGH BOTH GUARDRAIL PANELS, BLOCKOUT AND POST AT POST 7.
2. A MINIMUM OF 25 FT OF W-BEAM GUARDRAIL IS REQUIRED DOWNSTREAM OF POST 7 PRIOR TO ANY TRANSITION OR ATTACHMENT TO RIGID BARRIER.
USE UPSTREAM HOLES TO SECURE BLOCKOUT TO POST 4-7
DETAIL E (SCALE 1:20)
USE DOWNTREAM SLOT TO SECURE BLOCKOUT AT POST 3
DETAIL F (SCALE 1:20)
USE DOWNSTREAM SLOT TO SECURE BLOCKOUT TO POST 2
DETAIL G (SCALE 1:20)
[41] 1 5/8"
[194] 7 5/8"
POST 3
POST 2
POST 1
POST 2, 4, 5 AND 6 ARE IN LINE.
OFFSET POST 1 FROM POST 2 PER DIMENSION SHOWN.
OFFSET POST 3 FROM POST 2 PER DIMENSION SHOWN.
ALL DIMENSIONS ARE TO THE OUTSIDE FLANGE OF THE POSTS.
POST 7
POST 6
POST 5
POST 4
POST 3
POST 2
POST 1
E
F
G
[1219] 48" FLARE
POST AND BLOCKOUT NOT CONNECTED TO W-BEAM GUARDRAIL PANEL
POST AND BLOCKOUT NOT CONNECTED TO W-BEAM GUARDRAIL PANEL
BEGIN MGS RAIL
37 1/2" TRANSITION PANEL
USE SHEAR BOLT KIT (ITEM 9) AT POST 5
POST 1 NO BLOCKOUT
[787] 31"
[934] 36 3/4"
GROUND LINE
[552] 21 3/4"
[805] 31 3/4"
[952] 37 1/2"
[1905] 75"
[1905] 75"
[1905] 75"
[1905] 75"
[1905] 75"
[1905 0 -51] 75" +0" -2"
[267] 10 1/2"
[12383] 40'-7 1/2"
SIZE B
DWG NO. XLFSUS-MGS
REV. F
SCALE 1:50
SHEET 2 OF 2
Doc. B100108

INSTALLATION AND MAINTENANCE MANUAL

X-TENSION®

NCHRP 350 TL-3 Tangent / Flared End Terminal and Median Attenuator

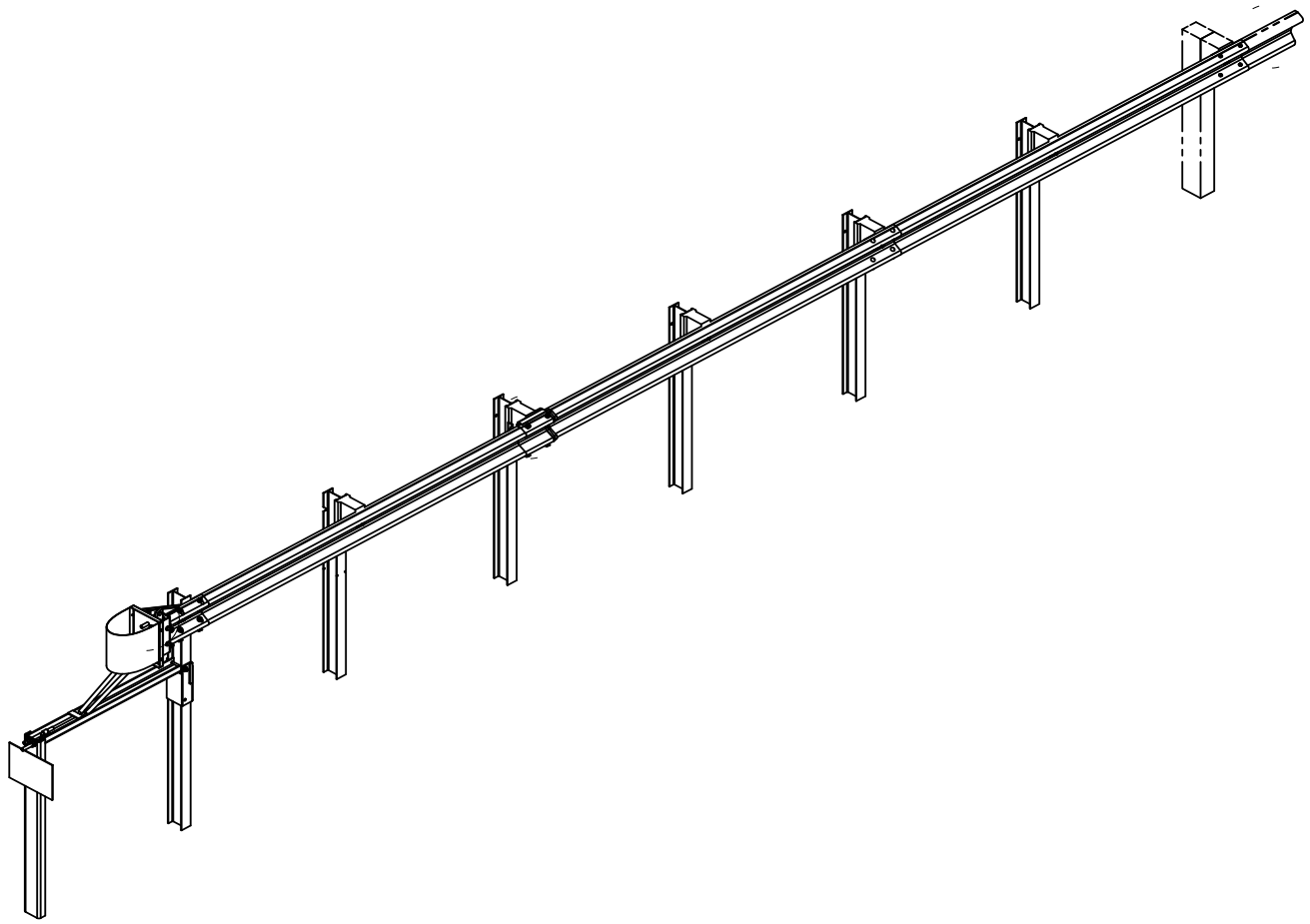

BARRIER SYSTEMS®
BY LINDSAY

Item	Qty	Part Description	Part#	U/M
1	1.00	X-Tension Terminal Component Kit	K070201	EACH
2	1.00	X-Tension Hardware Kit, GT,Std For XTGTK	K070202	EACH
3	1.00	X-Tension System Hardware Kit, GT, Std, XTGTSS2 or 3	K070206	EACH
4	1.00	X-Tension GT Guardrail Component Kit 3	K070210	EACH
5	1.00	I-BEAM POST, MIDDLE, X350	B061100	EACH

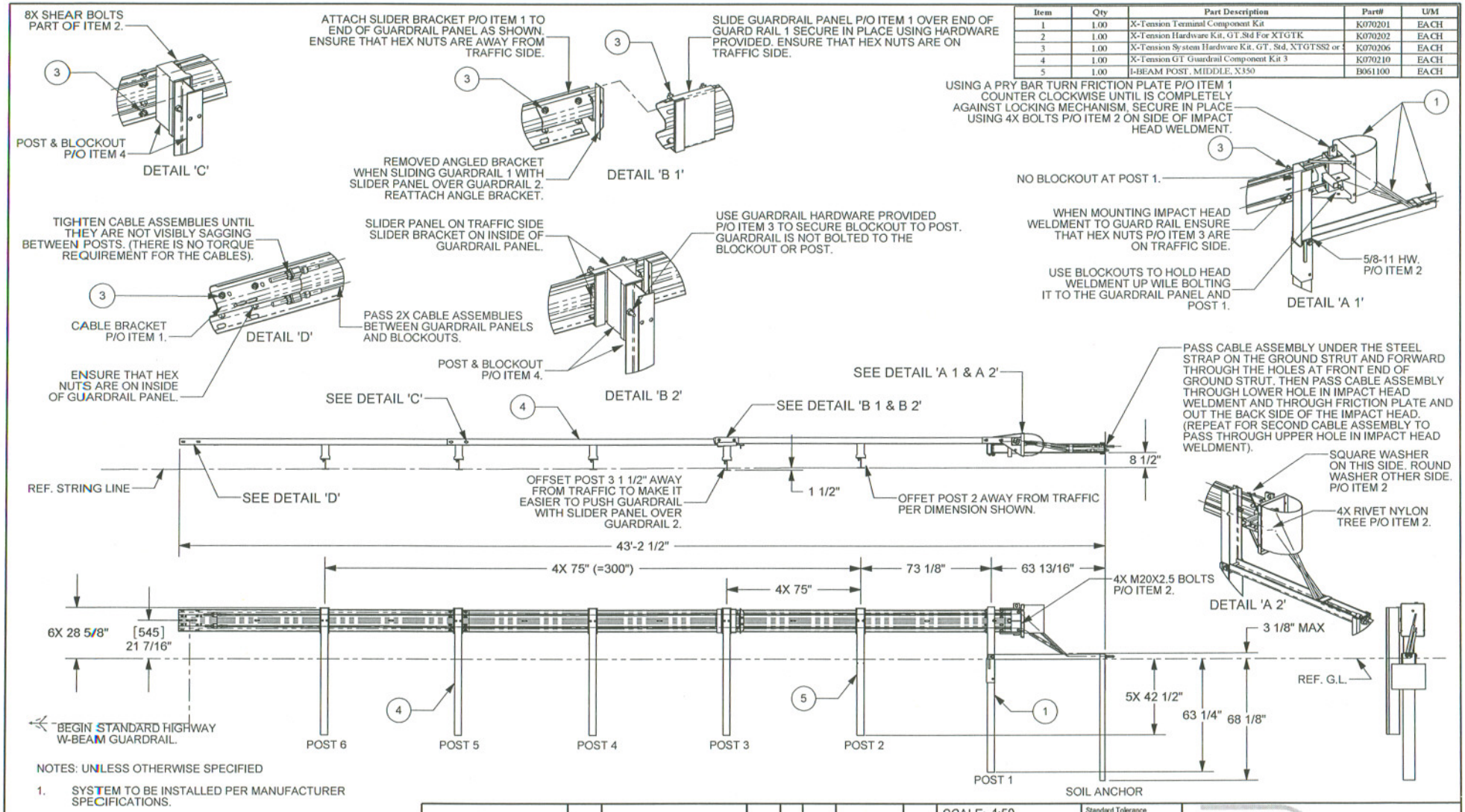

NOTES: UNLESS OTHERWISE SPECIFIED

1. SYSTEM TO BE INSTALLED PER MANUFACTURER SPECIFICATIONS.
2. ONLY TIGHTEN THE CABLE ASSEMBLIES USING THE NUTS AT THE CABLE BRACKET (SEE DETAIL 'D'). DO NOT TIGHTEN THE CABLES AT THE FRONT OF THE GROUND ANCHOR.
3. WHEN DRIVING STEEL POST, ENSURE THAT A DRIVING CAP WITH TIMBER OR PLASTIC INSERT IS USED TO PREVENT DAMAGE TO THE GALVANIZING TO THE TOP OF THE POST.

© 2007 Barrier Sytems Inc.

The information here on is proprietary to Barrier Systems Inc. shall not be disclosed, duplicated or used otherwise without the express written approval of Barrier Systems Inc.

REV.	CHANGES	DATE	BY	REQ'D	NEXT ASSY.	ITEM
B	SEE ECN# 942	8/31/07	AEM			
A	SEE ER# 531	8/08/07	AEM			

SCALE: 1:50

	DATE	INIT.
DRAWN BY	08/06/07	AEM
APPR'D BY		

Standard Tolerance
Angular ± 1/2°
Fractional ± 1/16"
Dec .XXX= ± .010
Dec .XX= ± .030

TITLE:
X-TENSION GUARDRAIL TERMINAL SYSTEM
STEEL POST WITH COMPOSIT BLOCKOUT

BARRIER SYSTEMS INC
180 RIVER RD, RIO VISTA, CA 94571
TEL: 707-374-6800 FAX: 707-374-6801

SHEET	DRAWING NUMBER	REV
1 OF 1	XTGTSS3	B

Item	Qty	Part Description	Part#	U/M
1	1.00	HEAD UNIT WELDMENT, NON-E.A. TERMINAL	B061214	EACH
2	1.00	TRIGGER HEAD WELDMENT, NON-E.A TERMINAL	B061222	EACH
3	1.00	BOTTOM POST WELDMENT, X350	B061098	EACH
4	1.00	SOIL ANCHOR WELDMENT, X350	B061104	EACH
5	1.00	GROUND STRUT WELDMENT, X350	B061094	EACH
6	1.00	I-BAEM POST, TOP, X350	B061099	EACH
7	1.00	NOSE PIECE, NON-E.A. GUARDRAIL TERMINAL	B070237	EACH
8	1.00	SLIDER BRACKET WELDMENT, X350	B061079	EACH
9	1.00	SLIDER PANEL WELDMENT, W-BEAM, X350	B061088	EACH
10	5.00	BLOCKOUT, TIMBER BLOCK GUARDRA	B061117	EACH
11	1.00	I-BEAM POST, MIDDLE, X350	B061100	EACH
12	3.00	W-Beam Guardrail RWMO2b	4002018	EACH
13	4.00	Rivet Nylon Tree Push-In 25/64	4002305	EACH
14	8.00	SHEAR BOLT, US, X-TENSION	A070426	EACH
15	24.00	Guardrail Bolt 5/8-11x1 1/4 MG	2001642	EACH
16	1.00	C-Scr HH 5/8-11x1 1/2 Gr5 MGal	2001626	EACH
17	2.00	C-Scr HH 3/4-10x2 1/2 Gr5 MGal	2001633	EACH
18	41.00	Wshr 5/8 F436 Struct MGal	2001636	EACH
19	4.00	Wshr SAE 3/4 HD MGal	2001630	EACH
20	2.00	Nut HN 3/4-10 HVY Gr2 MGal	2001631	EACH
21	41.00	Nut HN 5/8-11 Gr8 MGal	2001632	EACH
22	1.00	CABLE ASSY, NON-E.A. GUARDRAIL TERMINAL	B070236	EACH
23	1.00	WASHER, POLYETHYLENE, HTCB	B061119	EACH
24	1.00	WASHER, CABLE ASSY, HIGH TENS	B061118	EACH
25	1.00	WASHER, CABLE ASSY, HIGH TENS	B061112	EACH
26	5.00	Bolt CH 5/8-11x10 Gr5 MGal	2001635	EACH
27	4.00	I-BEAM POST, MIDDLE, X350	B070164	EACH

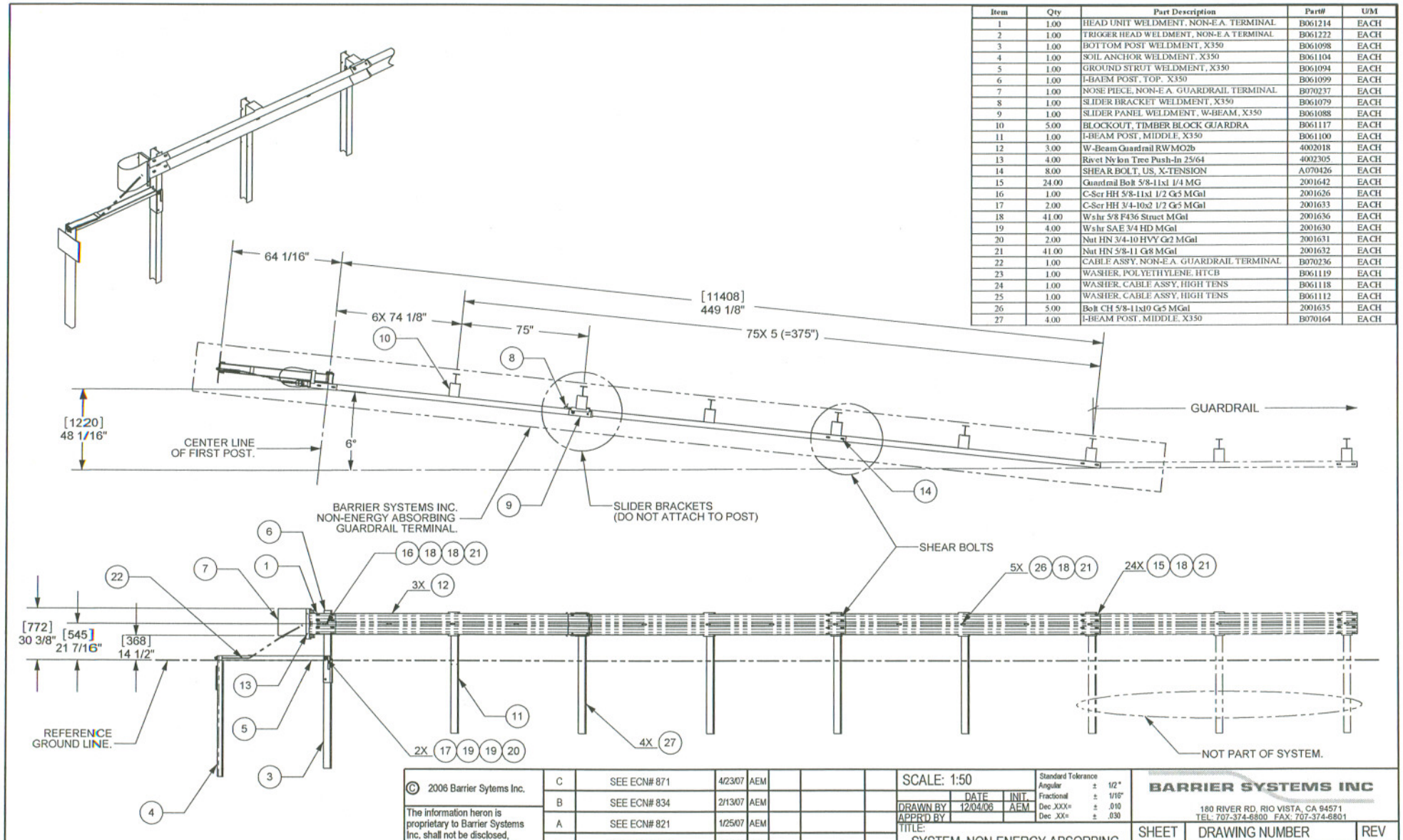

© 2006 Barrier Sytems Inc.

The information heron is proprietary to Barrier Systems Inc. shall not be disclosed, duplicated or used otherwise without the express written approval of Barrier Systems Inc.

REV.	CHANGES	DATE	BY	REQ'D	NEXT ASSY.	ITEM
C	SEE ECN# 871	4/23/07	AEM			
B	SEE ECN# 834	2/13/07	AEM			
A	SEE ECN# 821	1/25/07	AEM			
0	NEW DRAWING	12/04/06	AEM			

SCALE: 1:50

	DATE	INIT.
DRAWN BY	12/04/06	AEM
APPR'D BY		

Standard Tolerance
Angular ± 1/2°
Fractional ± 1/16"
Dec .XXX= ± .010
Dec .XX= ± .030

TITLE:
SYSTEM, NON-ENERGY ABSORBING GUARDRAIL TERMINAL

BARRIER SYSTEMS INC
180 RIVER RD, RIO VISTA, CA 94571
TEL: 707-374-6800 FAX: 707-374-6801

SHEET	DRAWING NUMBER	REV
1 OF 1	B061226	C

Dist	COUNTY	ROUTE	POST MILES TOTAL PROJECT	SHEET No.	TOTAL SHEETS
05	SLO	41	19.7/R42.2	11	??

REGISTERED CIVIL ENGINEER DATE

6-13-16
PLANS APPROVAL DATE

REGISTERED PROFESSIONAL ENGINEER MICHAEL JAMES DAY No. 66870 Exp. 9/30/16 CIVIL STATE OF CALIFORNIA

THE STATE OF CALIFORNIA OR ITS OFFICERS OR AGENTS SHALL NOT BE RESPONSIBLE FOR THE ACCURACY OR COMPLETENESS OF SCANNED COPIES OF THIS PLAN SHEET.

NOTE:
1. USE 15'-7½" LENGTH RAIL.

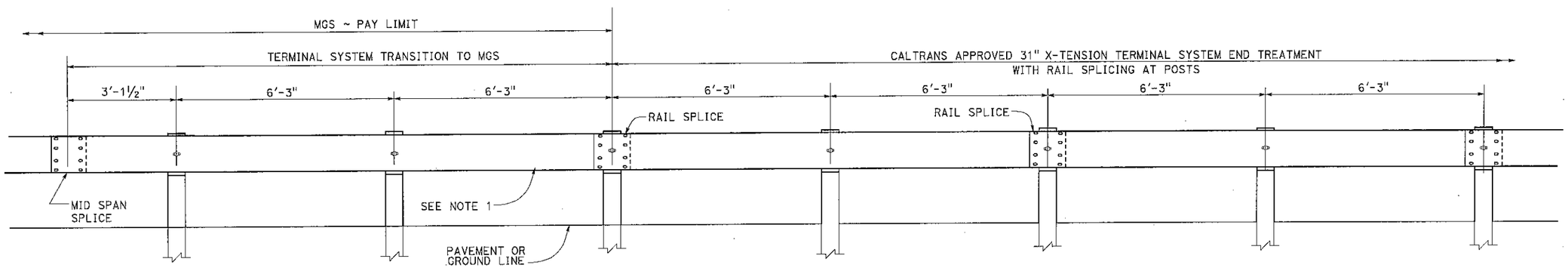

TRANSITION DETAIL FOR 31" X-TENSION TERMINAL SYSTEM END TREATMENT WITH RAIL SPLICING AT POSTS TO MIDWEST GUARDRAIL SYSTEM

EXISTING UTILITY FACILITIES HAVE NOT BEEN PLOTTED ON PORTIONS OF THESE PLANS

CONSTRUCTION DETAILS

SCALE AS SHOWN

C-9

STATE OF CALIFORNIA - DEPARTMENT OF TRANSPORTATION
Caltrans
06-DESIGN

FUNCTIONAL SUPERVISOR: SCOTT SHAVER
CALCULATED-DESIGNED BY: MAGDI MARZOUK
CHECKED BY: MICHAEL DAY
REVISED BY
DATE REVISED

LAST REVISION DATE PLOTTED => 10-JUN-2016
06-10-16 TIME PLOTTED => 07:03

MATERIALS INFORMATION

6. Pavement Recycling with Intelligent Compaction Survey Control Points

FV1766	2390267	5812146	1155.629	CEMETARY 1972 3.5" BRASS CAP
PM20.06	2382506	5776674	987.405	
PM20.88	2381288	5780076	1234.343	5/8" REBAR W/ PP
PM21.35	2382302	5780830	1401.184	
PM21.98	2380822	5783189	1414.415	120 1" IP RCTP
PM23.08	2380353	5788593	1310.079	1" IP W/ RED CAP "CALTRANS CONTROL"
PM24.00	2382745	5792780	1250.947	1" IP W/ RED CAP "CALTRANS CONTROL"
PM24.97	2385960	5796541	1175.315	120 5/8" REBAR "CALTRANS CONTROL" PP
PM26.00	2389403	5800410	1110.524	120 5/8" REBAR W/ RED CAP "CALTRANS CONTROL"
PM27.00	2390272	5804764	1144.144	120 1"IP "CALTRANS CONTROL"PP
PM28.00	2390264	5809659	1078.121	120 5/8" REBAR W/ RED CAP "CALTRANS CONTROL"
PM29.00	2390851	5814762	1119.25	1" IP W/ RED CAP "CALTRANS CONTROL"
PM30.00	2394455	5819037	1130.44	120 1" IP W/ RED CAP "CALTRANS CONTROL"
PM31.00	2397020	5823259	1275.249	120 5/8" REBAR W/ RED CAP "CALTRANS CONTROL"
PM31.97	2401149	5825783	1520.254	120 5/8" REBAR W/ RED CAP "CALTRANS"
PM32.85	2404835	5827469	1520.27	120 5/8" REBAR "CALTRANS CONTROL"PP
PM33.50	2406464	5829910	1350.481	120 5/8" REBAR W/ ALUM CAP "CALTRANS CONTROL"
PM34.00	2406114	5832412	1298.169	120 5/8" REBAR "CALTRANS CONTROL"PP
PM34.50	2405283	5835074	1245.127	120 5/8" REBAR W/ RED CAP "CALTRANS CONTROL"
PM35.00	2405605	5837465	1218.787	120 5/8" REBAR "CALTRANS CONTROL"PP
PM35.97	2409087	5840512	1169.34	120 5/8" REBAR W/ RED CAP "CALTRANS CONTROL"
PM36.59	2411281	5842834	1316.838	120 5/8" REBAR "CALTRANS CONTROL" PP
PM38.18	2418505	5846830	1234.171	120 5/8" REBAR W/ PP "CALTRANS CONTROL"
PM38.73	2420772	5848502	1194.714	120 5/8" REBAR "CALTRANS CONTROL"PP
PM39.62	2425461	5848532	1138.657	120 5/8" REBAR W/ PP "CALTRANS CONTROL"
PM40.62	2430683	5848656	1098.969	120 5/8" REBAR "CALTRANS CONTROL" PP
PM41.40	2433460	5847379	1014.726	120 5/8" REBAR W/ PP "CALTRANS CONTROL"
PM42.10	2435316	5844545	1011.43	120 5/8" REBAR W/ RED CAP "CALTRANS CONTROL"
PM 37.50	2415080	5845599	1307.076	120 5/8"REBAR "CALTRANS CONTROL"PP
PMR17.98	2381155	5774792	910.982	120 1" IP "CALTRANS CONTROL" PP

SLO 41
SR1505-0041
INTELLIGENT COMPACTION 3RD ORDER CONTROL
NAD83(NSRS2007), ZONE 5, 2014.50 EPOCH

N

PM42.10
PM41.40
PM40.62
PM39.62
PM38.73
PM38.18
PM 37.50
PM36.59
PM35.97
PM32.85
PM31.97
PM31.00
PM30.00
PM29.00
PM26.00
PM24.97
PM24.00
PM23.08

10000 ft

SLO 41

SR1505-0041

INTELLIGENT COMPACTION 3RD ORDER CONTROL

NAD83(NSRS2007), ZONE 5, 2014.50 EPOCH

HWY 41E Control

EA 05-1g150 Intelligent Compaction

HWY 41E Control

EA 05-1g150 Intelligent Compaction

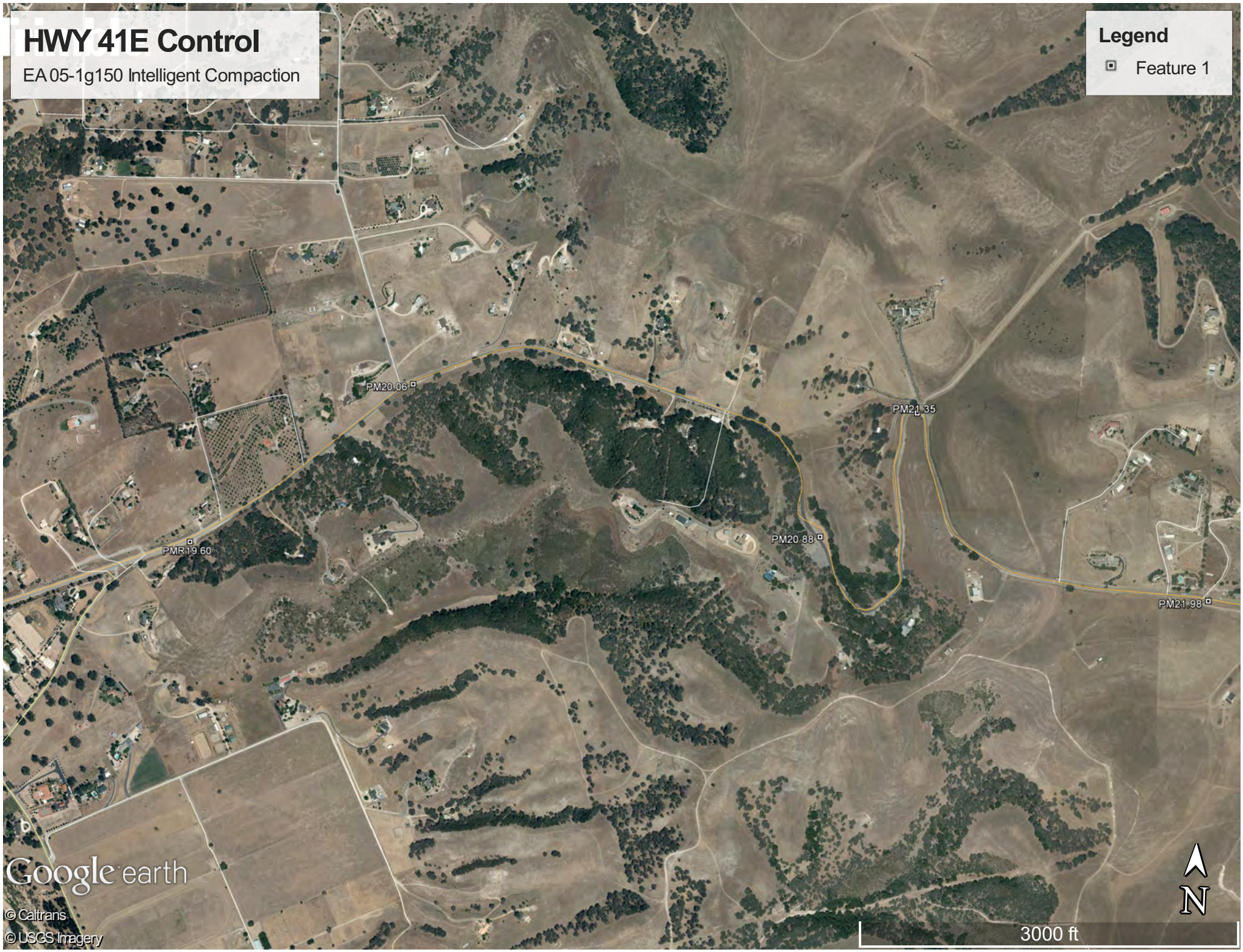

HWY 41E Control
EA 05-1g150 Intelligent Compaction
Legend
Feature 1
PM24.00
PM21.98
41
Tamara Ln
Poco Rd
PM23.08
Misty Canyon Rd
Kingsbury Rd
Google earth
© Caltrans
© USGS Imagery
N
3000 ft

HWY 41E Control

EA 05-1g150 Intelligent Compaction

HWY 41E Control

EA 05-1g150 Intelligent Compaction

HWY 41E Control

EA 05-1g150 Intelligent Compaction

HWY 41E Control

EA 05-1g150 Intelligent Compaction

HWY 41E Control
EA 05-1g150 Intelligent Compaction
Legend
Feature 1
PM31.00
PM30.00
Google earth
© USGS Imagery
N
3000 ft

HWY 41E Control

EA 05-1g150 Intelligent Compaction

HWY 41E Control

EA 05-1g150 Intelligent Compaction

HWY 41E Control

EA 05-1g150 Intelligent Compaction

HWY 41E Control

EA 05-1g150 Intelligent Compaction

HWY 41E Control

EA 05-1g150 Intelligent Compaction

HWY 41E Control
EA 05-1g150 Intelligent Compaction
Legend
Feature 1
PM40.62
PM39.62
Google earth
© USGS Imagery
N
3000 ft

HWY 41E Control
EA 05-1g150 Intelligent Compaction
Legend
Feature 1
PM42.10
PM41.40
PM40.62
Google earth
© USGS Imagery
N
3000 ft