DIST	COUNTY	ROUTE	POST MILES TOTAL PROJECT	SHEET No.	TOTAL SHEETS
X	X	X	X	X	X

REGISTERED CIVIL ENGINEER X DATE

PLANS APPROVAL DATE

REGISTERED PROFESSIONAL ENGINEER X No. X Exp. X CIVIL STATE OF CALIFORNIA

The State of California or its officers or agents shall not be responsible for the accuracy or completeness of electronic copies of this plan sheet.

SPAN, S			12′											
WALL HEIGHT, H			6′		8′		10′		12′		14′		15′	
Max Earth Cover			10′	20′	10′	20′	10′	20′	10′	20′	10′	20′	10′	20′
Concrete	Roof T1		11"	1′-2"	1′-0"	1′-3"	1′-3"	1′-5"	1′-6"	1′-8"	2′-1"	2′-1"	2′-3"	2′-3"
Concrete	Walls T2		11"	1′-2"	1′-0"	1′-3"	1′-3"	1′-5"	1′-6"	1′-8"	1′-9"	2′-0"	1′-11"	2′-2"
Reinforcement	Spacing		12"	10"	12"	9"	12"	9"	11"	9"	10"	9"	9"	8"
Reinforcement	"a"	Bar size	#8	#8	#8	#8	#8	#8	#8	#8	#8	#8	#8	#8
Reinforcement	"b"	Bar size	#6	#6	#6	#6	#7	#6	#9	#8	#10	10	#10	#10
Reinforcement	"b"	*Bw - Cut-off Length	Full Height											
Reinforcement	"c"	Bar size	#6	#6	#6	#6	#6	#6	#7	#7	#7	#7	#7	#7
Reinforcement	"c"	C - Cut-off Length	2′-0"	2′-0"	2′-0"	2′-0"	2′-0"	2′-6"	2′-6"	2′-9"	2′-6"	3′-0"	2′-6"	3′-3"
Reinforcement	"d"	Bar size	#6	#6	#6	#6	#6	#6	#7	#7	#8	#8	#8	#8
Reinforcement	"e"	Bar size	#4	#4	#4	#4	#4	#4	#4	#4	#4	#4	#4	#4
Quantities	Concrete CF/LF		24.7	31.7	31.0	39.1	44.1	50.3	59.5	66.6	82.3	90.3	94.1	102.8
Quantities	Reinf lb/LF		220	264	252	328	307	374	484	547	694	773	807	912

SPAN, S			14′											
WALL HEIGHT, H			6′		8′		10′		12′		14′		15′	
Max Earth Cover			10′	20′	10′	20′	10′	20′	10′	20′	10′	20′	10′	20′
Concrete	Roof T1		11"	1′-3"	1′-1"	1′-4"	1′-3"	1′-5"	1′-6"	1′-8"	1′-10"	2′-0"	1′-11"	2′-4"
Concrete	Walls T2		11"	1′-2"	1′-0"	1′-4"	1′-3"	1′-5"	1′-6"	1′-8"	1′-10"	2′-0"	2′-0"	2′-3"
Reinforcement	Spacing		10"	9"	10"	8"	10"	8"	10"	8"	10"	8"	9"	8"
Reinforcement	"a"	Bar size	#8	#8	#8	#8	#8	#8	#8	#8	#8	#8	#8	#8
Reinforcement	"b"	Bar size	#6	#7	#6	#6	#6	#7	#8	#8	#10	#8	#10	#9
Reinforcement	"b"	*Bw - Cut-off Length	Full Height											
Reinforcement	"c"	Bar size	#6	#7	#6	#7	#6	#7	#7	#7	#8	#8	#8	#8
Reinforcement	"c"	C - Cut-off Length	2′-0"	2′-6"	2′-0"	2′-6"	2′-0"	3′-0"	2′-6"	3′-3"	2′-9"	4′-6"	3′-0"	4′-6"
Reinforcement	"d"	Bar size	#6	#6	#6	#6	#6	#6	#7	#7	#8	#8	#8	#8
Reinforcement	"e"	Bar size	#4	#4	#4	#4	#4	#4	#4	#4	#4	#4	#4	#4
Quantities	Concrete CF/LF		26.5	35.4	34.3	44.6	46.6	53.2	62.5	69.9	84.7	93.0	95.5	106.6
Quantities	Reinf lb/LF		275	312	313	411	354	467	512	638	743	819	863	921

SPAN, S			16′											
WALL HEIGHT, H			6′		8′		10′		12′		14′		15′	
Max Earth Cover			10′	20′	10′	20′	10′	20′	10′	20′	10′	20′	10′	20′
Concrete	Roof T1		1′-2"	1′-4"	1′-3"	1′-5"	1′-4"	1′-6"	1′-7"	1′-9"	1′-10"	2′-0"	2′-0"	2′-2"
Concrete	Walls T2		11"	1′-3"	1′-1"	1′-3"	1′-3"	1′-5"	1′-7"	1′-9"	1′-10"	2′-1"	2′-1"	2′-3"
Reinforcement	Spacing		10"	9"	10"	9"	10"	8"	10"	8"	10"	8"	10"	8"
Reinforcement	"a"	Bar size	#8	#9	#8	#9	#8	#9	#8	#9	#8	#9	#8	#9
Reinforcement	"b"	Bar size	#6	#8	#6	#8	#6	#8	#7	#8	#9	#8	#9	#9
Reinforcement	"b"	*Bw - Cut-off Length	Full Height											
Reinforcement	"c"	Bar size	#6	#8	#6	#8	#6	#8	#7	#8	#8	#8	#8	#8
Reinforcement	"c"	C - Cut-off Length	2′-0"	2′-0"	2′-0"	2′-0"	2′-0"	3′-3"	2′-6"	3′-6"	2′-9"	3′-9"	3′-0"	4′-0"
Reinforcement	"d"	Bar size	#6	#6	#6	#6	#6	#6	#7	#7	#8	#8	#8	#8
Reinforcement	"e"	Bar size	#4	#4	#4	#4	#4	#4	#4	#4	#4	#4	#4	#4
Quantities	Concrete CF/LF		32.8	40.7	41.0	47.2	50.7	57.6	69.3	77.1	88.4	99.7	103.8	112.9
Quantities	Reinf lb/LF		298	448	336	499	374	618	504	745	715	885	833	990

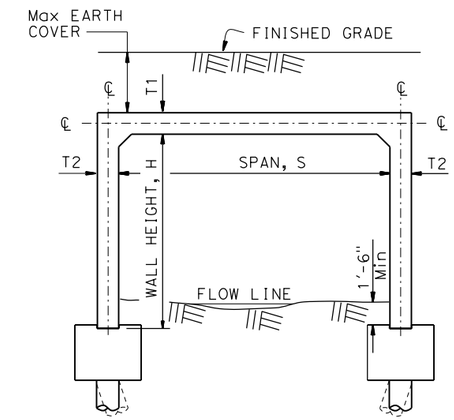

BOTTOMLESS CULVERT

CAST-IN-PLACE (CIP)
No Scale

SPAN, S			18′											
WALL HEIGHT, H			6′		8′		10′		12′		14′		15′	
Max Earth Cover			10′	20′	10′	20′	10′	20′	10′	20′	10′	20′	10′	20′
Concrete	Roof T1		1′-4"	1′-6"	1′-4"	1′-7"	1′-5"	1′-8"	1′-7"	1′-9"	1′-11"	2′-1"	2′-1"	2′-3"
Concrete	Walls T2		11"	1′-3"	1′-0"	1′-3"	1′-4"	1′-6"	1′-7"	1′-8"	1′-9"	2′-2"	2′-1"	2′-4"
Reinforcement	Spacing		11"	9"	11"	9"	11"	8"	11"	8"	11"	8"	11"	8"
Reinforcement	"a"	Bar size	#8	#9	#8	#9	#8	#9	#8	#9	#8	#9	#8	#9
Reinforcement	"b"	Bar size	#7	#8	#7	#8	#7	#8	#7	#8	#8	#8	#9	#9
Reinforcement	"b"	*Bw - Cut-off Length	Full Height											
Reinforcement	"c"	Bar size	#7	#7	#7	#8	#7	#7	#7	#8	#7	#7	#8	#8
Reinforcement	"c"	C - Cut-off Length	2′-0"	3′-0"	2′-0"	3′-3"	2′-0"	3′-6"	2′-6"	3′-9"	3′-9"	4′-3"	4′-3"	4′-3"
Reinforcement	"d"	Bar size	#6	#6	#6	#6	#6	#6	#7	#7	#8	#8	#8	#8
Reinforcement	"e"	Bar size	#4	#4	#4	#4	#4	#4	#4	#4	#4	#4	#4	#4
Quantities	Concrete CF/LF		38.4	46.8	43.7	53.5	56.9	66.0	72.5	78.3	96.5	108.2	109.7	119.1
Quantities	Reinf lb/LF		325	469	394	568	438	639	516	743	653	827	760	1028

SPAN, S			20′											
WALL HEIGHT, H			6′		8′		10′		12′		14′		15′	
Max Earth Cover			10′	20′	10′	20′	10′	20′	10′	20′	10′	20′	10′	20′
Concrete	Roof T1		1′-6"	1′-8"	1′-6"	1′-9"	1′-7"	1′-10"	1′-9"	2′-2"	2′-0"	2′-2"	2′-1"	2′-4"
Concrete	Walls T2		11"	1′-4"	1′-0"	1′-6"	1′-2"	1′-7"	1′-7"	1′-9"	1′-11"	2′-2"	2′-2"	2′-4"
Reinforcement	Spacing		11"	9"	11"	8"	11"	8"	11"	8"	11"	8"	11"	8"
Reinforcement	"a"	Bar size	#8	#9	#8	#9	#8	#9	#8	#9	#8	#9	#8	#9
Reinforcement	"b"	Bar size	#7	#8	#8	#8	#8	#8	#8	#8	#8	#8	#9	#9
Reinforcement	"b"	*Bw - Cut-off Length	Full Height											
Reinforcement	"c"	Bar size	#7	#8	#7	#7	#7	#7	#7	#7	#7	#7	#8	#8
Reinforcement	"c"	C - Cut-off Length	2′-0"	3′-6"	2′-0"	3′-9"	2′-0"	4′-0"	2′-6"	4′-3"	3′-0"	4′-6"	3′-6"	4′-6"
Reinforcement	"d"	Bar size	#6	#6	#6	#6	#6	#6	#7	#7	#8	#8	#8	#8
Reinforcement	"e"	Bar size	#4	#4	#4	#4	#4	#4	#4	#4	#4	#4	#4	#4
Quantities	Concrete CF/LF		44.8	54.8	50.0	65.3	60.0	75.1	79.5	93.9	102.3	114.4	116.7	122.8
Quantities	Reinf lb/LF		346	583	446	622	490	679	574	791	675	922	783	1069

* ⌐ shape bars vertical legs may be spliced per Standard Specifications.

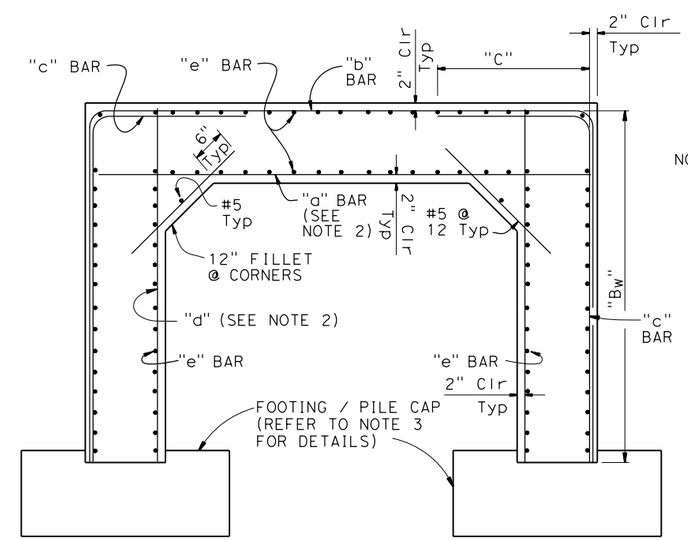

TYPICAL SECTION

No Scale

NOTES:

1. For boxes of height less than that shown in table, use next greater table height slab, wall dimensions, and reinforcing steel. Make necessary changes in bar lengths, number of spacers, and quantities.
2. The "a" and "d" bars are at half spacings.
3. Refer to "FOUNDATION DETATILS" sheet for foundation details.
4. Quantities are approximate and for design purpose only.

STANDARD DRAWING

FILE NO. xs17-052

APPROVAL DATE July 2014

STATE OF CALIFORNIA DEPARTMENT OF TRANSPORTATION

DIVISION OF ENGINEERING SERVICES

BRIDGE NO. X

POST MILE X

X

CIP BOTTOMLESS CULVERT PILES/FOOTINGS ON SOIL

DS OSD 2147A (ENGLISH STANDARD DRAWING "XS" BORDER REV. (02-02-11)

ORIGINAL SCALE IN INCHES FOR REDUCED PLANS 0 1 2 3

UNIT: X
PROJECT NUMBER & PHASE: X
CONTRACT NO.: X

DISREGARD PRINTS BEARING EARLIER REVISION DATES

REVISION DATES 6-19-14

SHEET X OF X

FILE => $REQUEST

USERNAME => $USER DATE PLOTTED => $DATE TIME PLOTTED => $TIME